RV®

JAB CM009

ISO 14001 JQA-EM7212

ISO 9001 JQA-1190

Precision Reduction Gear RV™

High Precision Gearhead

RA

RA Series

Nabtesco

Nabtesco's technologies supporting society

Contributing to society with our 'Moving it. Stopping it.' technologies

Nabtesco manufactures products which are used in everyday life. Our high-accuracy components are essential for moving objects; they may be rarely visible, but are the foundation of everyday objects that you see moving and wonder how. Nabtesco's technologies are found throughout objects that move and stop people's lives.

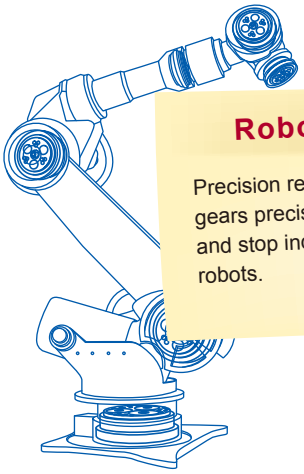

Robots

Precision reduction gears precisely move and stop industrial robots.

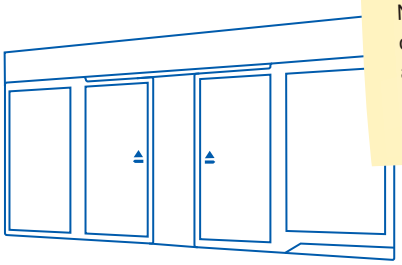

Doors

Nabtesco technology opens and closes automatic doors in buildings and platform doors at train stations.

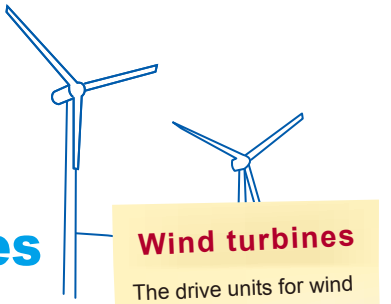

Wind turbines

The drive units for wind turbine generators control the orientation of the wind turbine and the angle of the blades.

Nabtesco technologies are at work in many areas of our daily lives.

Construction machinery

Running motors and control valves start and stop hydraulic excavators.

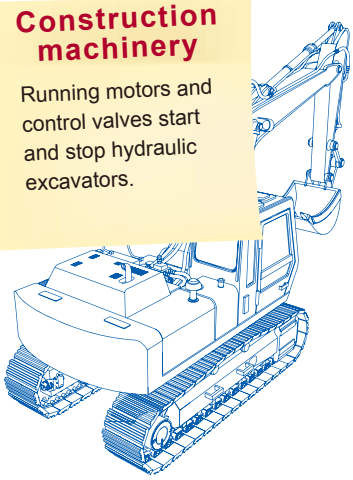

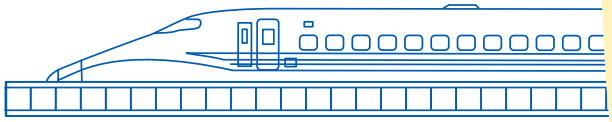

Bullet trains

Brakes and doors ensure safety and comfort for the world-famous Shinkansen bullet trains.

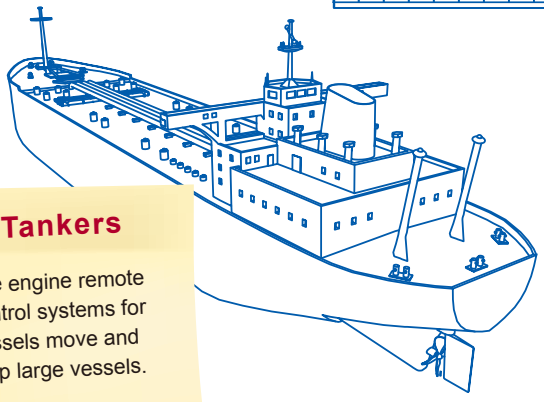

Tankers

The engine remote control systems for vessels move and stop large vessels.

Airplanes

The flight control systems are crucial for the flight safety of aircraft.

CONTENTS

Who is Nabtesco?

The key words for Nabtesco are 'motion control'. We use our strengths in the fields of component and systems technologies to develop highly creative products. Through the Nabtesco Group as a whole, we can also utilize our advantage of expertise to maximum effect in order to further enhance these strengths.
In the air, on land and at sea, we have a leading share in various fields of both international and domestic markets. Nabtesco will continue to evolve by utilizing its strengths in many fields and by exploring the possibilities of the future.

April 2002 Initiation of hydraulic equipment business alliance
October 2003 Business merger

The business alliance between Teijin Seiki and NABCO on hydraulic equipment projects was the beginning of a mutual confirmation by the companies of the other's product configuration, core technologies, corporate strategies and corporate culture. This led to a common recognition that a business merger would be an extremely effective means of increasing corporate value and achieving long-term development. Based on this mutual judgment, in 2003 an equity transfer was conducted to establish Nabtesco as a pure holding company, with both firms as wholly owned subsidiaries. After a year of preparation, both companies were absorbed and amalgamated by means of a short form merger, and Nabtesco was transitioned to an operating holding company.

What is the RA Series ? 02 – 03
Examples of uses for the RA Series 04 – 05
Principle of operation 06
RA series model code 07
Rating table 08 – 09
External dimensions Reduction gear main unit 10 – 13
External dimensions Input gear 14 – 16
External dimensions Motor flange 17 – 18

Technical Information

Considering the use of the RA Series 20
Glossary 21

Product selection

Product selection flowchart 22
Model code selection examples 23 – 30
Allowable moment diagram 31

Technical Data

No-load running torque 31
Efficiency table 32
Low temperature characteristic 32
Calculation of tilt angle and torsion angle 33

Design Points

Reduction gear installation components 34 – 35

Appendix

Inertia moment calculation formula 36
Troubleshooting checksheet 37
Order Information Sheet 38
Warranty Back inside cover

The RA Series includes gearheads for high precision control of ATC magazines, ATC arms, APC, and turret drives of lathe machining centers.

RA-EA Series

RA-EC Series

RA Series characteristics and structure

High reliability
High rigidity
High precision
High torque

The double-ended support design and unique pin gear mechanism provide the following advantages:

(1) Capable of high shock load 5 times the rated torque
(2) High torsional rigidity
(3) Small backlash [1 arc.min]
(4) High torque density (capable of high torque with downsized gear)

Heavy load support

A set of internal main bearings (large angular ball bearings) enables complete support of heavy external loads.

Two benefits due to the above features

1. **Compact design with a reduced number of parts**
2. **Reduced man-hours (for design, assembly, and adjustment)**

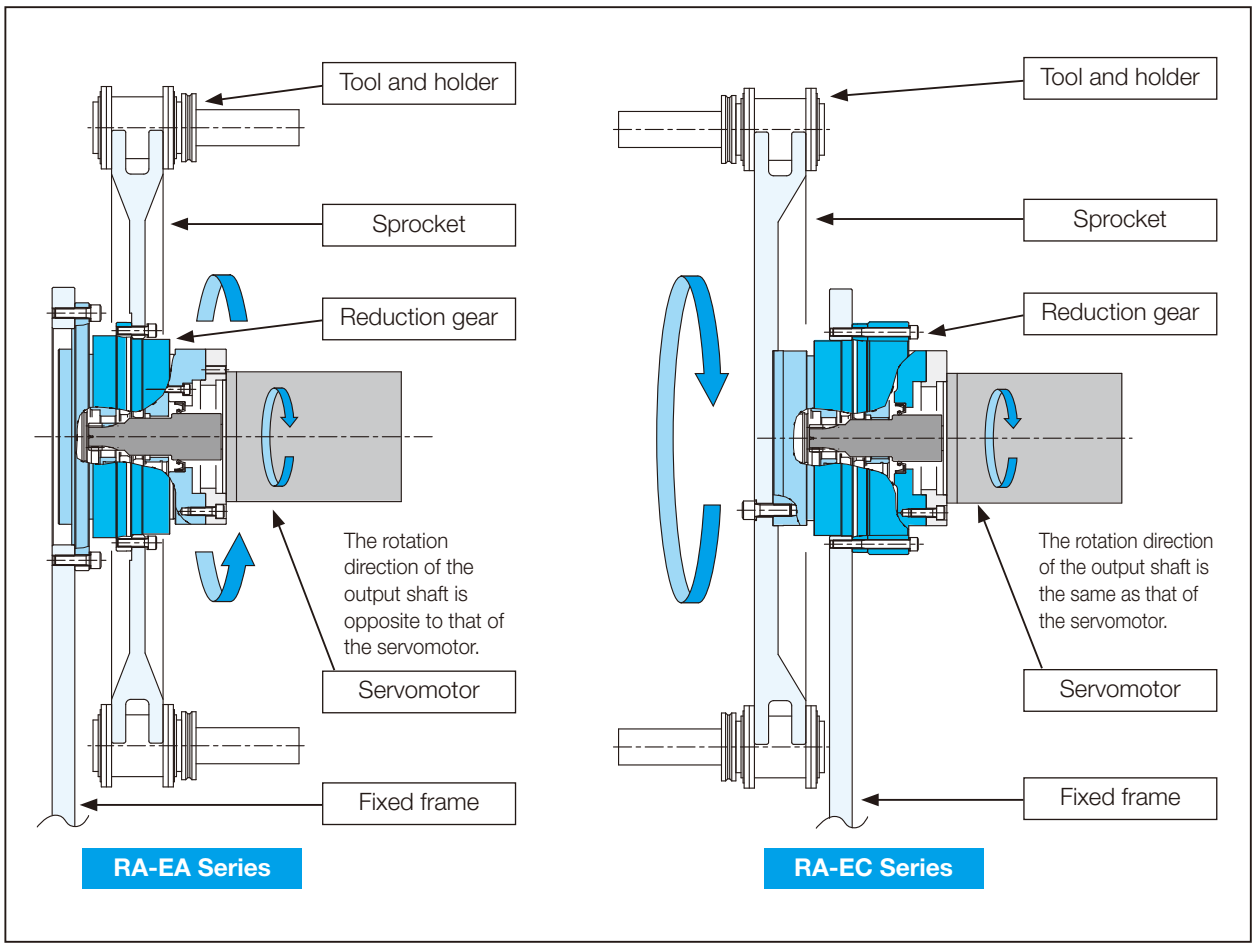

Examples of uses for the RA Series

For machining center

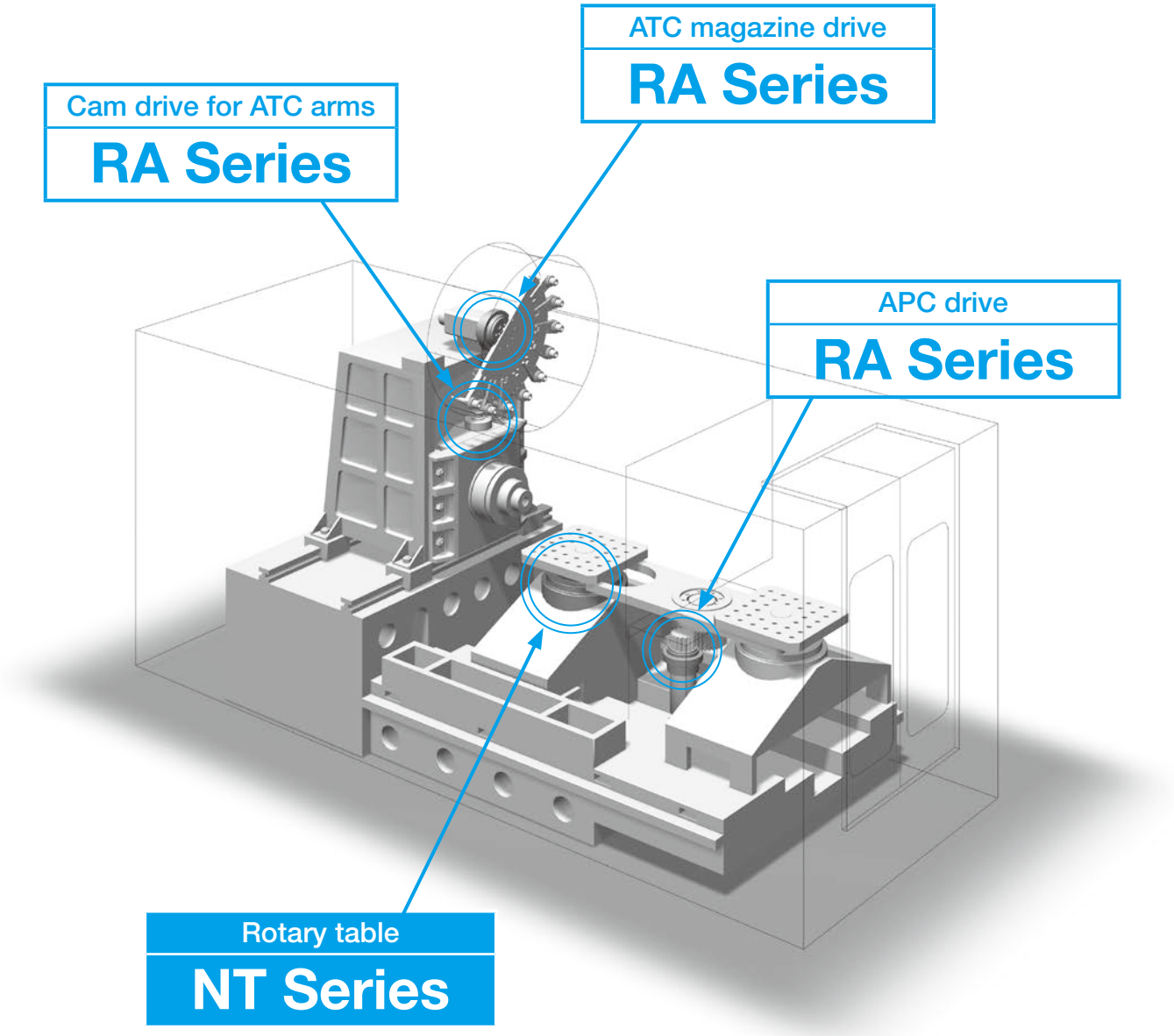

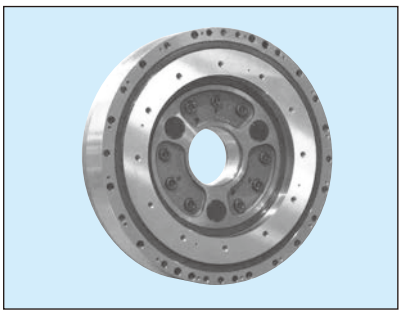

Contact us for NT Series rotary tables.

For NC lathe or combined lathe

ATC magazine drive

RA Series

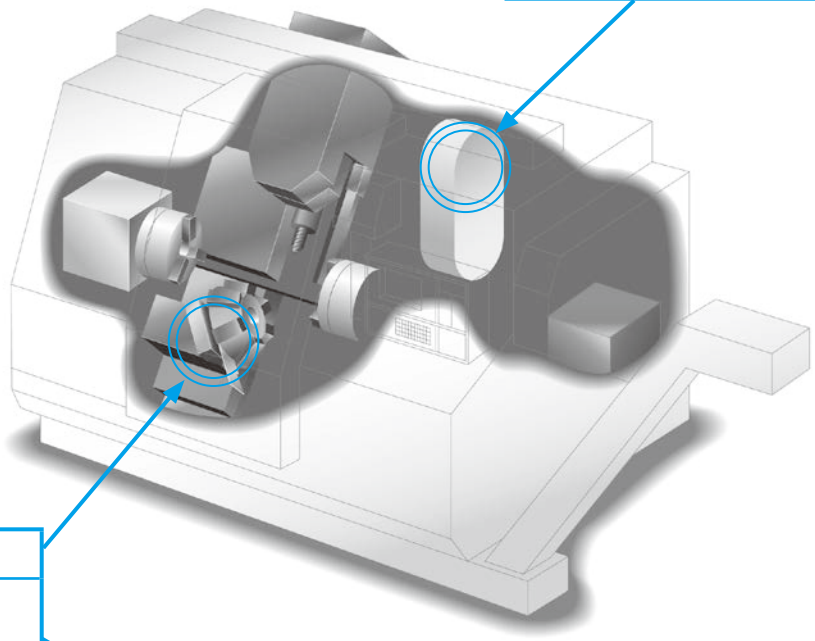

Lathe turret drive

RA Series

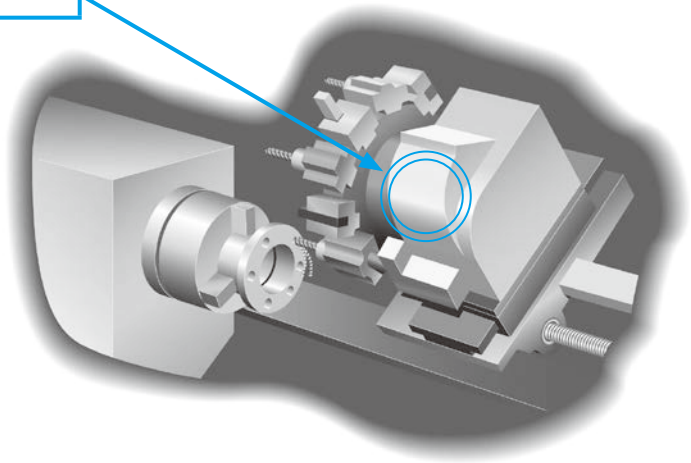

RA-EA Series

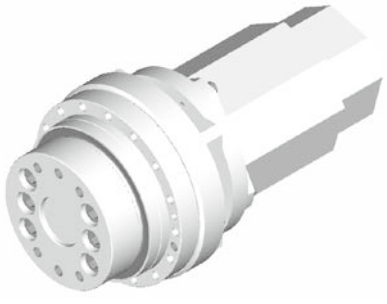

RA-EC Series

Principle of operation

1. Rotation of the servomotor is transmitted through the input gear to the spur gears, and the speed is reduced according to the gear ratio between the input gear and the spur gears. <Fig. 1>
2. Since the crankshafts are directly connected to the spur gears, they have the same rotational speed as the spur gears. <Fig. 1>
3. Two RV gears are mounted around the needle bearings on the eccentric section of the crankshaft. (In order to balance the equal amount of force, two RV gears are mounted.) <Fig. 2>
4. When the crankshafts rotate, the two RV gears mounted on the eccentric sections also revolve eccentrically around the input axis (crank movement). <Fig. 2>
5. Pins are arrayed in a constant pitch in the grooves inside the case. The number of pins is just one larger than the number of RV gear teeth. <Fig. 3>
6. As the crankshafts revolve one complete rotation, the RV gears revolve eccentrically one pitch of a pin (crank movement), with all the RV teeth in contact with all of the pins. As a result, 1 RV gear tooth moves in the opposite direction of the crankshaft rotation. <Fig. 3>
7. The rotation is then output to the shaft (output shaft) via the crankshaft so that the crankshaft rotation speed can be reduced in proportion to the number of pins. <Fig. 3>
8. The total reduction ratio is the product of the first reduction ratio multiplied by the second reduction ratio.

Fig. 1. First reduction section

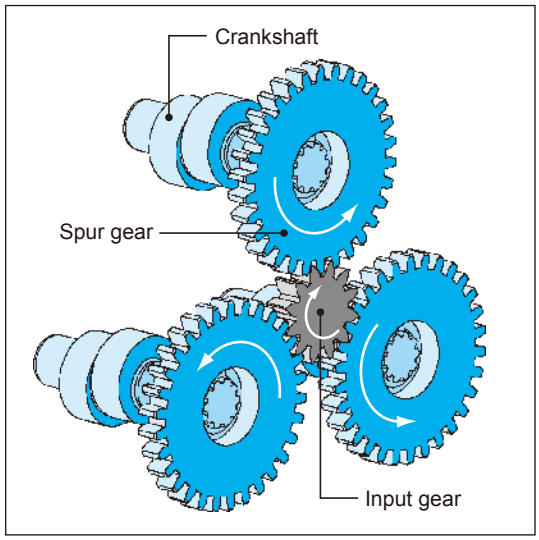

Fig. 2. Crankshaft section

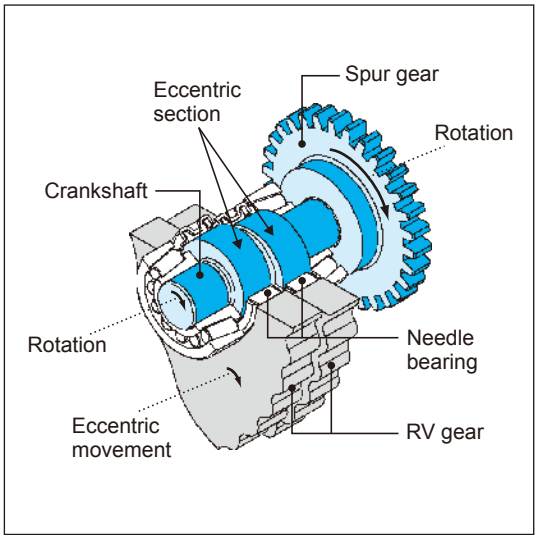

Fig. 3. Second reduction section

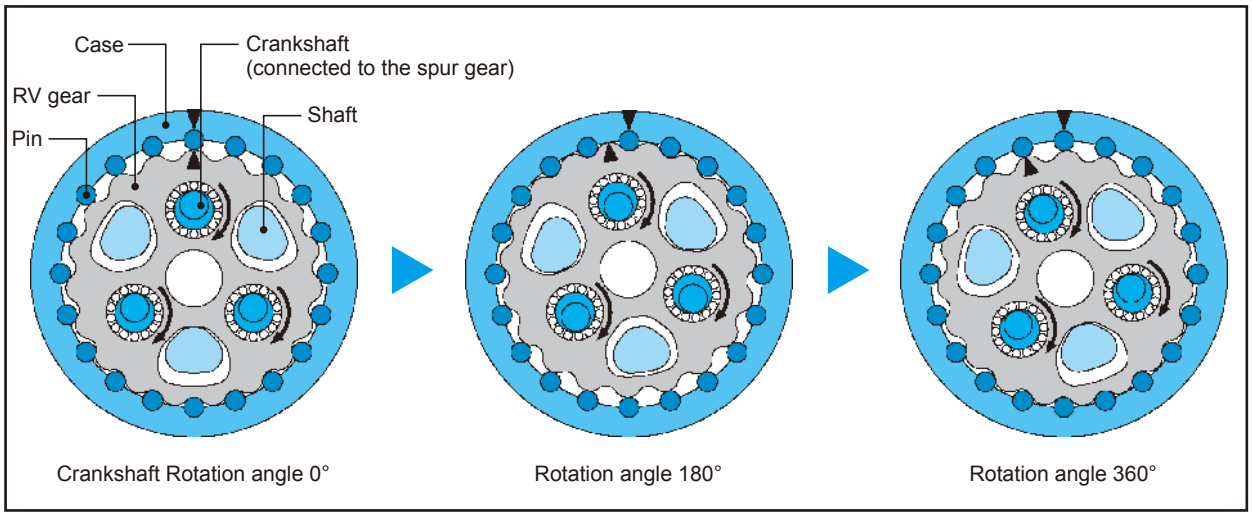

RA Series model code

Product code

RA – 40E A – 120 – XA3 – 3XB

Model code	Frame number	Series code	Ratio code	Input gear code	Motor flange code	Drawing
RA	20	A: Case rotation type	80, 104, 120, 140, 160	Standard component: 2 alphabetic characters + 1 numerical value (code will differ depending on motor to be attached) None: ZZZ	Standard component: 1 numerical value + 2 alphabetic characters (code will differ depending on motor to be attached) None: ZZZ	P.10
	40		80, 104, 120, 152			P.11
	80		80, 100, 120, 152			P.12
	160		80, 100, 128, 144, 170			P.13
	20	C: Shaft rotation type	81, 105, 121, 141, 161			P.10
	40		81, 105, 121, 153			P.11
	80		81, 101, 121, 153			P.12
	160		81, 101, 129, 145, 171			P.13

RA-EA Series (Case rotating type)

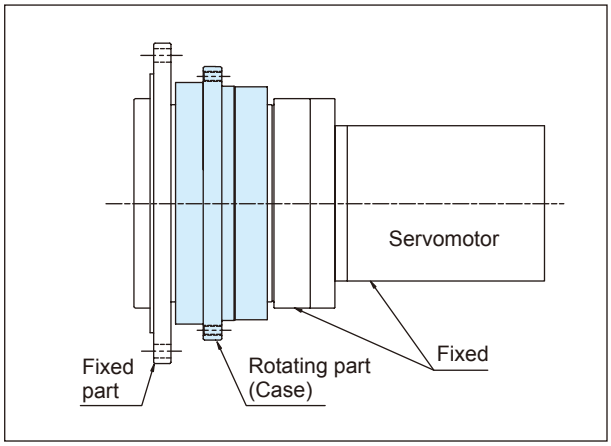

RA-EC Series (Shaft rotating type)

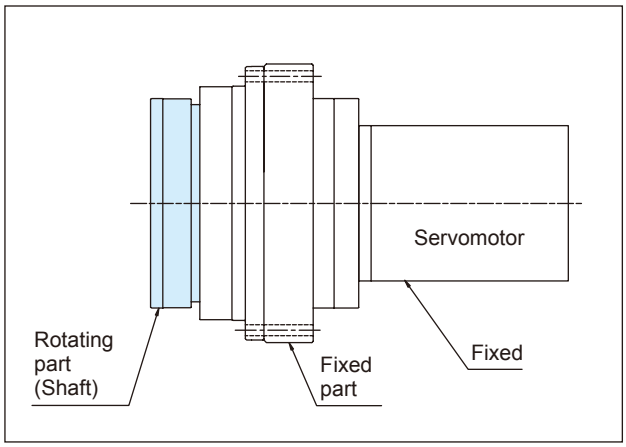

Rating table

Model	R Speed ratio					To Rated torque Nm	No Rated output speed rpm	K Rated life h	Ts1 Allowable acceleration/ deceleration torque Nm
RA-EA Series									
RA-20EA	80	104	120	140	160	167	15	6000	412
RA-40EA	80	104	120	152		412	15	6000	1029
RA-80EA	80	100	120	152		784	15	6000	1960
RA-160EA	80	100	128	144	170	1568	15	6000	3920
RA-EC Series									
RA-20EC	81	105	121	141	161	167	15	6000	412
RA-40EC	81	105	121	153		412	15	6000	1029
RA-80EC	81	101	121	153		784	15	6000	1960
RA-160EC	81	101	129	145	171	1568	15	6000	3920

Note:
1. The rating table shows the specification values of each individual reduction gear.
2. The allowable output speed may be limited by heat depending on the operating rate. Make sure that the surface temperature of the reduction gear does not exceed 60°C during use.
3. For the inertia moment of the reduction gears, refer to the Product Summary Sheet.
4. When the reduction gear is used at low temperatures, there will be a larger no-load running torque. Note this characteristic when selecting a motor. (Refer to “Low temperature characteristics” on page 32)
5. The allowable moment will differ depending on the thrust load. Check the allowable moment diagram (p. 31).
6. For the moment rigidity and torsional rigidity, refer to the calculation of tilt angle and the torsion angle (p. 33).
7. The rated torque is the value that produces the rated service life based on operation at the rated output speed; it does not indicate the maximum load. Refer to “Glossary” (p.21) and “Product selection flowchart” (p.22).
8. The specifications above are based on Nabtesco evaluation methods; this product should only be used after confirming that it is appropriate for the operating conditions of your system.

Ts2 Momentary maximum allowable torque Nm	Ns0 Allowable output speed [Duty ratio: 100%] Note 2 rpm	Ns1 Allowable output speed [Duty ratio: 40%] Note 2 rpm	Backlash arc.min.	Lost motion arc.min.	Startup efficiency (Representative values) %	Capacity of main bearing			Mass kg
						Mo1 Allowable moment Note 5 Nm	Mo2 Momentary maximum allowable moment Nm	Wr Allowable radial load N	
833	45	75	1.0	1.0	75	882	1764	7,255	10
2058	42	70	1.0	1.0	70	1666	3332	11,594	18.5
3920	42	70	1.0	1.0	75	2156	4312	12,988	28
7840	27	45	1.0	1.0	75	3920	7840	18,587	58
833	45	75	1.0	1.0	75	882	1764	7,255	9.5
2058	42	70	1.0	1.0	70	1666	3332	11,594	20
3920	42	70	1.0	1.0	75	2156	4312	12,988	27
7840	27	45	1.0	1.0	75	3920	7840	18,587	59

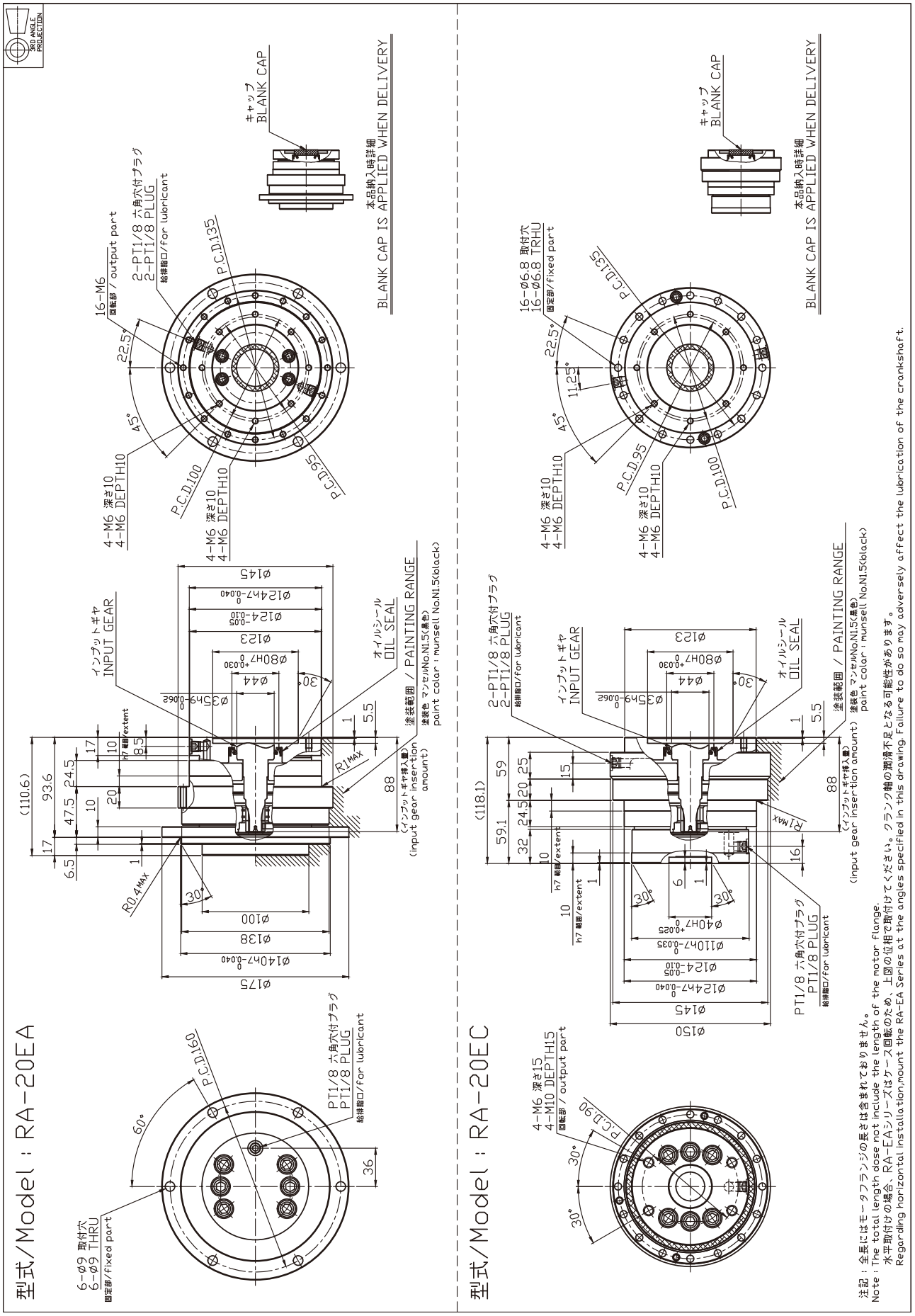

Specifications and dimensions are subject to change without notice.

型式/Model：RA-40EA

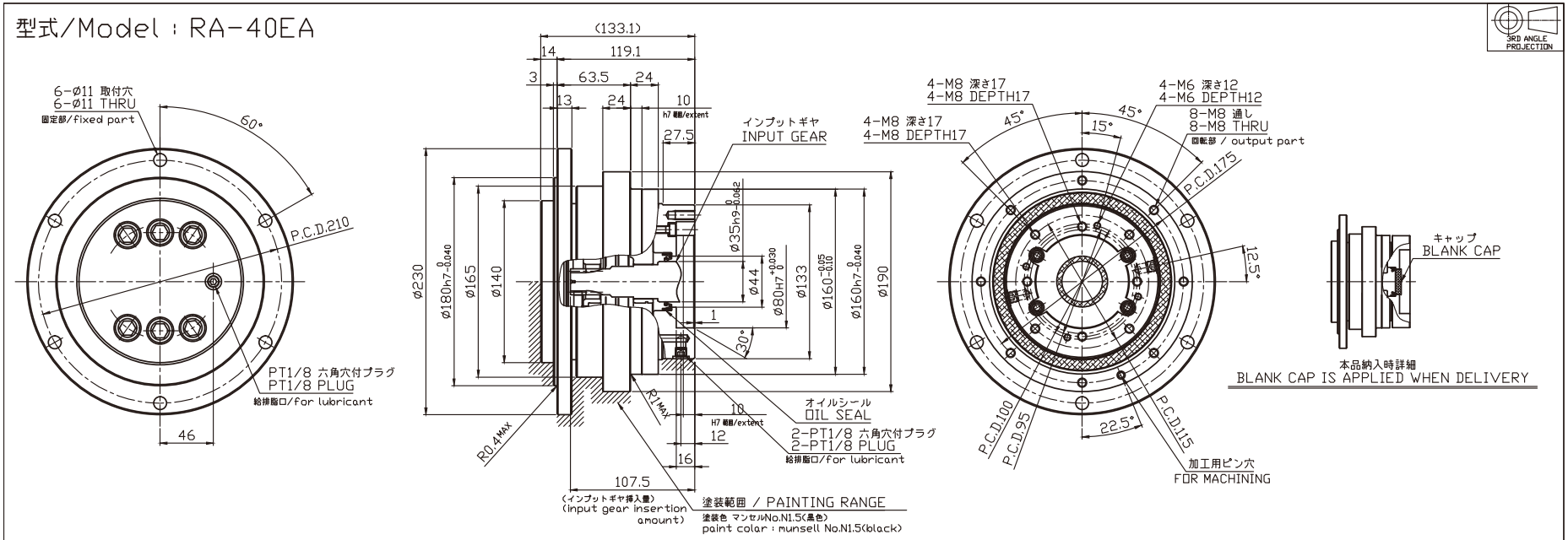

型式/Model：RA-40EC

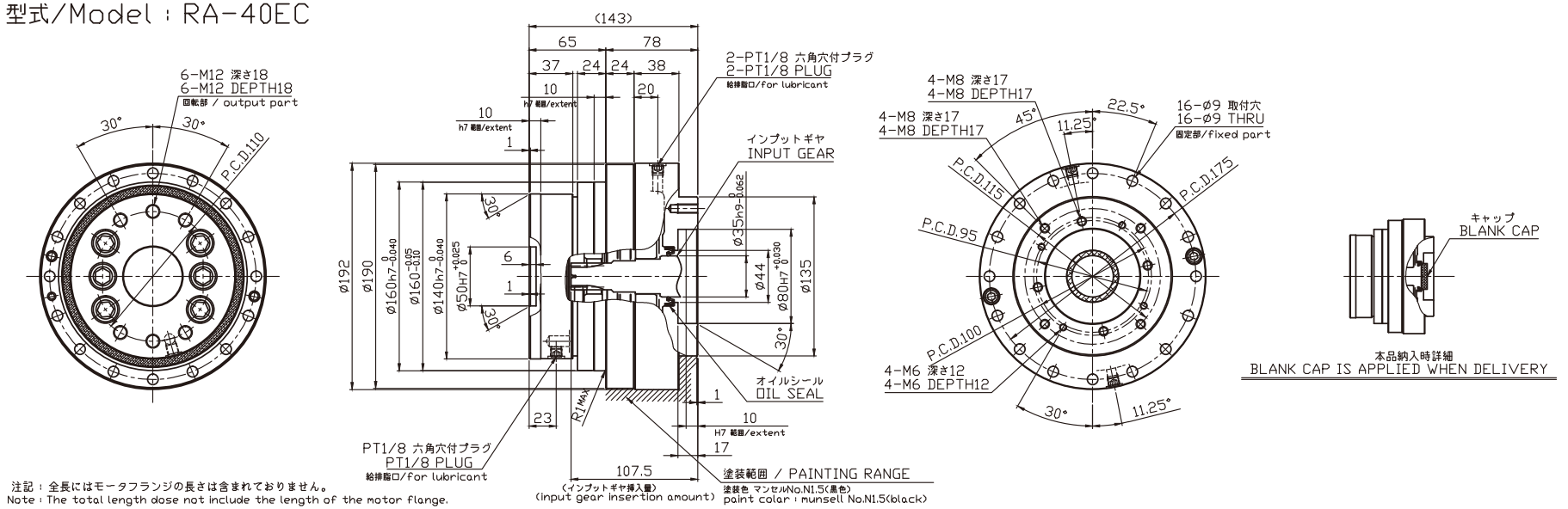

注記：全長にはモータフランジの長さは含まれておりません。
Note：The total length dose not include the length of the motor flange.

水平取付けの場合、RA-EAシリーズはケース回転のため、上図の位相で取付けてください。クランク軸の潤滑不足となる可能性があります。
Regarding horizontal installation,mount the RA-EA Series at the angles specified in this drawing. Failure to do so may adversely affect the lubrication of the crankshaft.

Specifications and dimensions are subject to change without notice.

型式/Model : RA-80EA

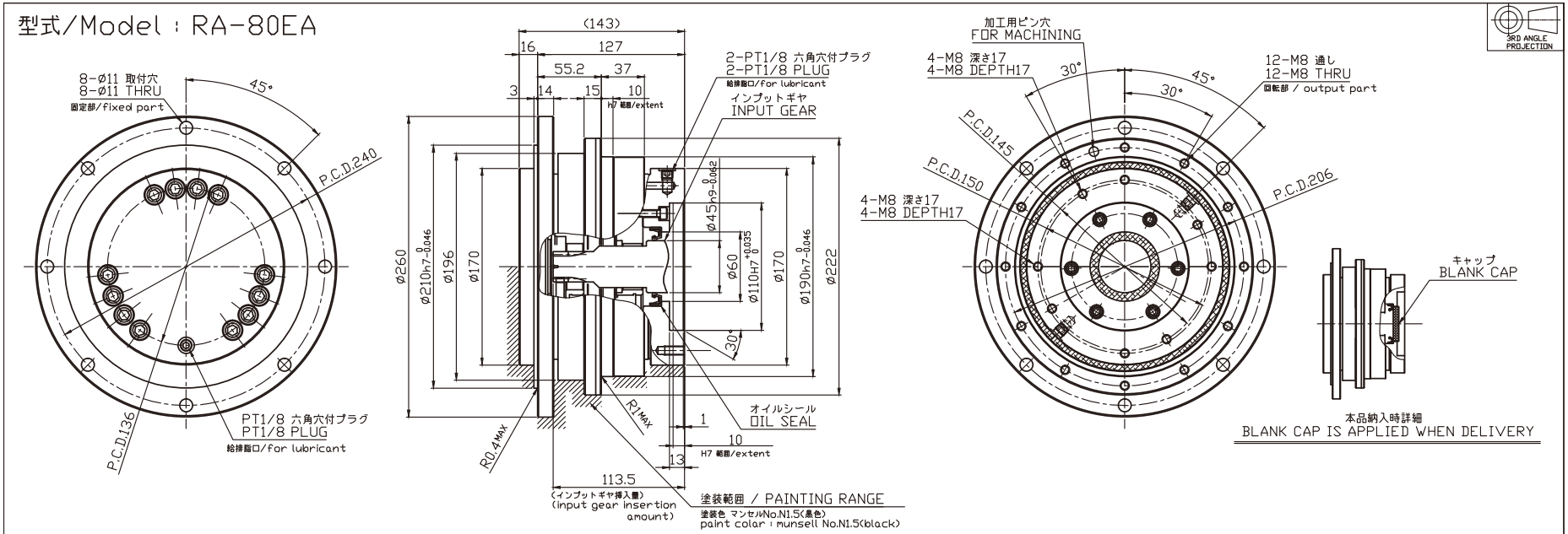

型式/Model : RA-80EC

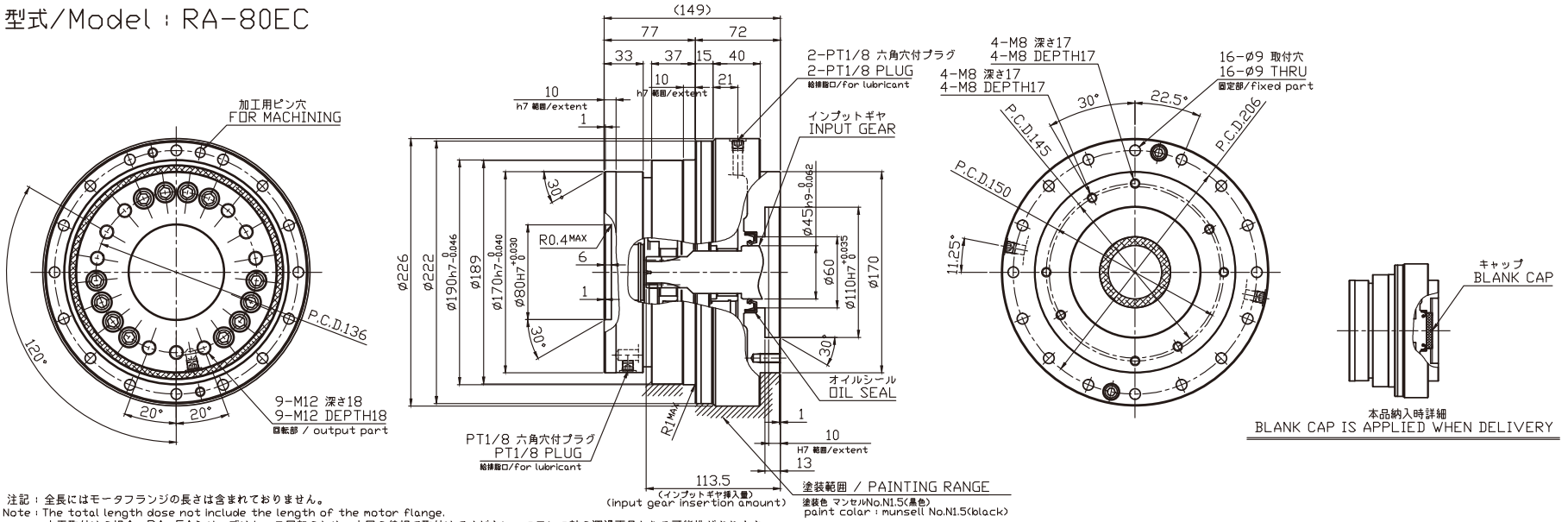

注記 : 全長にはモータフランジの長さは含まれておりません。
Note : The total length dose not include the length of the motor flange.
水平取付けの場合、RA-EAシリーズはケース回転のため、上図の位相で取付けてください。クランク軸の潤滑不足となる可能性があります。
Regarding horizontal installation,mount the RA-EA Series at the angles specified in this drawing. Failure to do so may adversely affect the lubrication of the crankshaft.

Specifications and dimensions are subject to change without notice.

型式/Model：RA-160EA

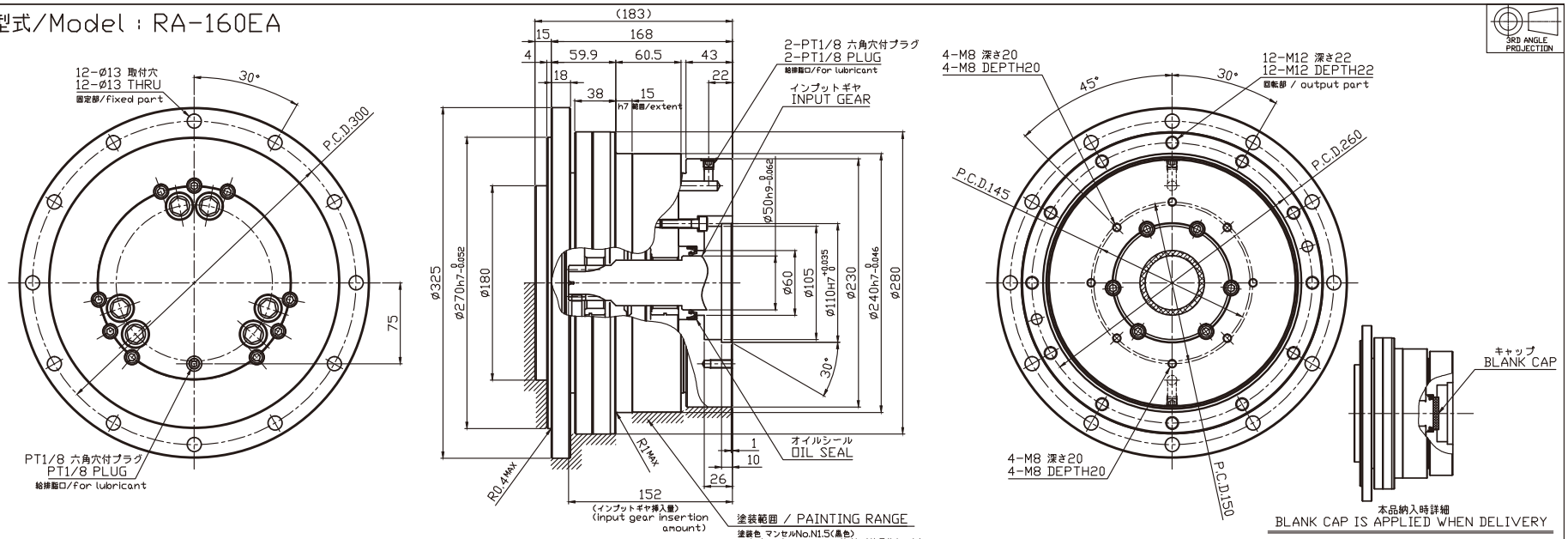

型式/Model：RA-160EC

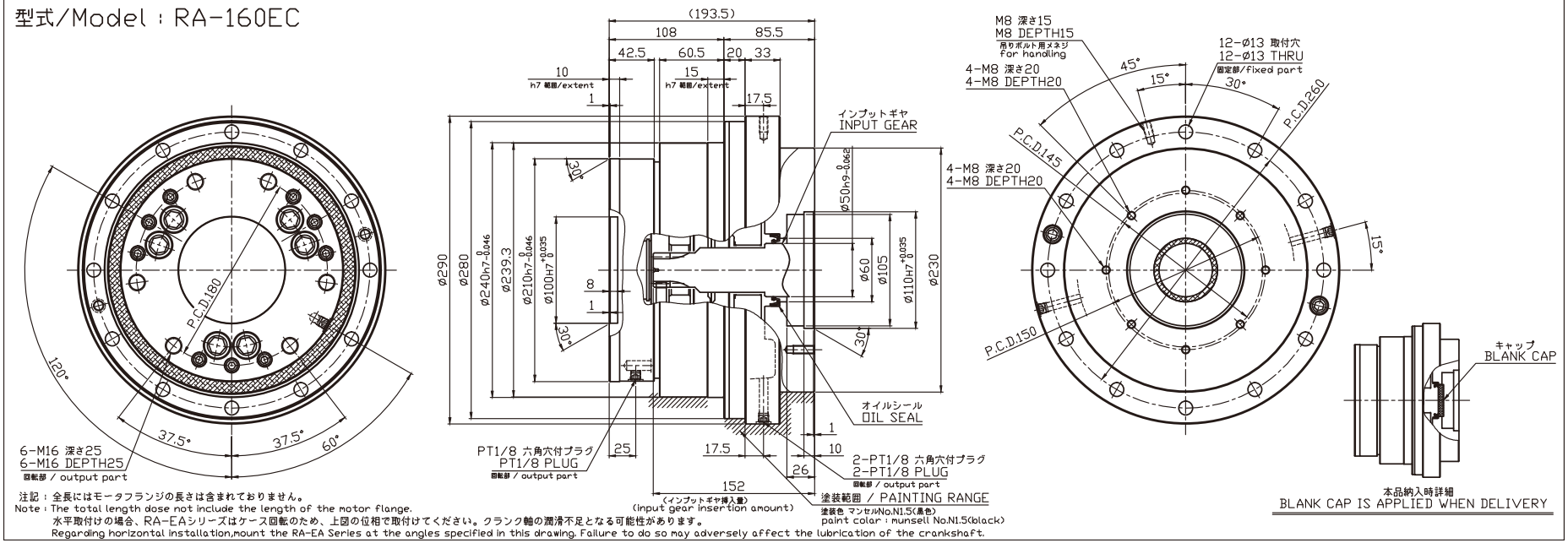

注記：全長にはモータフランジの長さは含まれておりません。
Note：The total length dose not include the length of the motor flange.
水平取付けの場合、RA-EAシリーズはケース回転のため、上図の位相で取付けてください。クランク軸の潤滑不足となる可能性があります。
Regarding horizontal installation,mount the RA-EA Series at the angles specified in this drawing. Failure to do so may adversely affect the lubrication of the crankshaft.

Specifications and dimensions are subject to change without notice.

External dimensions Input gear

Straight shaft (with key)

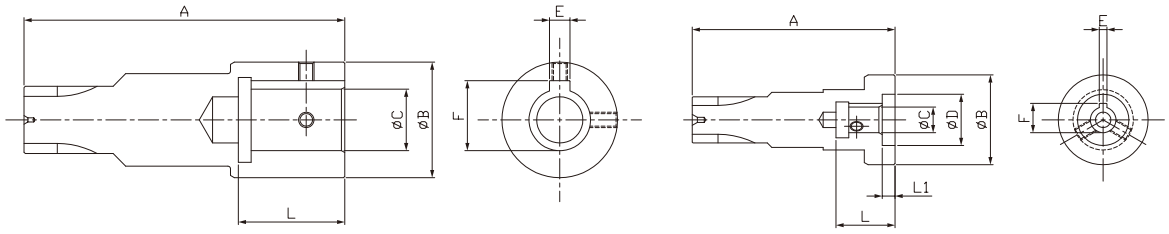

Model	Speed ratio		Input gear code	Order item number	Input gear dimensions (mm)										
	EA	EC			A	ØB	ØC		ØD	L	L1	E		F	
RA-20E	80	81	XS2	21RA107-*	79	35	10H7	+0.015 0	20	23	5	3	±0.0125	11.4	+0.2 0
	104	105	XA2	21RA107A*											
	120	121	XB2	21RA107B*											
	140	141	XC2	21RA107C*											
	160	161	XD2	21RA107D*											
	80	81	BL2	21RA107BL*	94.5	35	14	+0.030 +0.012	-	21.5	-	5	±0.015	16.3	+0.2 0
	104	105	BM2	21RA107BM*											
	120	121	BN2	21RA107BN*											
	140	141	BP2	21RA107BP*											
	160	161	BQ2	21RA107BQ*											
	80	81	XK2	21RA107K*	135.5	42	24H7	+0.021 0	-	47.5	-	8	±0.018	27.3	+0.2 0
	104	105	XL2	21RA107L*											
	120	121	XM2	21RA107M*											
	140	141	XN2	21RA107N*											
	160	161	XP2	21RA107P*											
	80	81	XQ2	21RA107Q*	113	35	19	+0.036 +0.015	-	35	-	6	±0.015	21.8	+0.2 0
	104	105	XR2	21RA107R*											
	120	121	XT2	21RA107T*											
	140	141	XU2	21RA107U*											
	160	161	XW2	21RA107W*											
	80	81	XX2	21RA107X*	138	42	24	+0.036 +0.015	-	45	-	8	±0.018	27.3	+0.2 0
	104	105	XY2	21RA107Y*											
	120	121	XZ2	21RA107Z*											
	140	141	AA2	21RA107AA*											
	160	161	AB2	21RA107AB*											
RA-40E	80	81	XS3	31RA107-*	120	35	19H7	+0.021 0	-	37.5	-	6	±0.015	21.8	+0.2 0
	104	105	XA3	31RA107A*											
	120	121	XB3	31RA107B*											
	152	153	XC3	31RA107C*											
	80	81	XD3	31RA107D*	99	35	14	+0.030 +0.012	-	21.5	-	5	±0.015	16.3	+0.2 0
	104	105	XE3	31RA107E*											
	120	121	XF3	31RA107F*											
	152	153	XG3	31RA107G*											
	80	81	XH3	31RA107H*	150	42	24H7	+0.021 0	-	47.5	-	8	±0.018	27.3	+0.2 0
	104	105	XJ3	31RA107J*											
	120	121	XK3	31RA107K*											
	152	153	XL3	31RA107L*											
	80	81	XM3	31RA107M*	142.5	42	24	+0.036 +0.015	-	45	-	8	±0.018	27.3	+0.2 0
	104	105	XN3	31RA107N*											
	120	121	XP3	31RA107P*											
	152	153	XQ3	31RA107Q*											
	80	81	XR3	31RA107R*	150	50	32	+0.043 +0.018	-	50.5	-	10	±0.018	35.3	+0.2 0
	104	105	XT3	31RA107T*											
	120	121	XU3	31RA107U*											
	152	153	XW3	31RA107W*											
RA-80E	80	81	XS4	41RA107-*	96	45	19H7	+0.021 0	-	37.5	-	6	±0.015	21.8	+0.2 0
	100	101	XA4	41RA107A*											
	120	121	XB4	41RA107B*											
	152	153	XC4	41RA107C*											
	80	81	BD4	41RA107BD*	177	55	35	+0.035 +0.010	-	72.5	-	10	±0.018	38.3	+0.2 0
	100	101	BE4	41RA107BE*											
	120	121	BF4	41RA107BF*											
	152	153	BG4	41RA107BG*											
	80	81	XH4	41RA107H*	125	45	24H7	+0.021 0	-	41.5	-	8	±0.018	27.3	+0.2 0
	100	101	XJ4	41RA107J*											
	120	121	XK4	41RA107K*											
	152	153	XL4	41RA107L*											
	80	81	XM4	41RA107M*	128.5	45	24	+0.036 +0.015	-	45	-	8	±0.018	27.3	+0.2 0
	100	101	XN4	41RA107N*											
	120	121	XP4	41RA107P*											
	152	153	XQ4	41RA107Q*											
	80	81	XR4	41RA107R*	156	50	32	+0.043 +0.018	-	50.5	-	10	±0.018	35.3	+0.2 0
	100	101	XT4	41RA107T*											
	120	121	XU4	41RA107U*											
	152	153	XW4	41RA107W*											
RA-160E	80	81	XS5	51RA107-*	205	58	35	+0.035 +0.010	-	72	-	10	±0.018	38.3	+0.2 0
	100	101	XA5	51RA107A*											
	128	129	XB5	51RA107B*											
	144	145	XC5	51RA107C*											
	170	171	XD5	51RA107D*											
	80	81	XE5	51RA107E*	140	50	24H7	+0.021 0	-	43	-	8	±0.018	27.3	+0.2 0
	100	101	XF5	51RA107F*											
	128	129	XG5	51RA107G*											
	144	145	XH5	51RA107H*											
	170	171	XJ5	51RA107J*											
	80	81	XK5	51RA107K*	164	58	32	+0.043 +0.018	-	50	-	10	±0.018	35.3	+0.2 0
	100	101	XL5	51RA107L*											
	128	129	XM5	51RA107M*											
	144	145	XN5	51RA107N*											
	170	171	XP5	51RA107P*											

Straight shaft (without key)

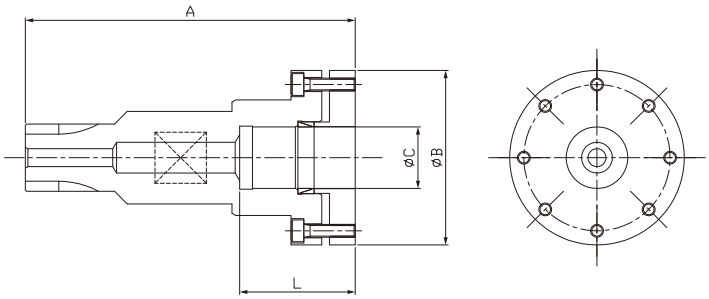

Model	Speed ratio		Input gear code	Order item number	Input gear dimensions (mm)					Transmission torque Nm
	EA	EC			A	ØB	ØC		L	
RA-20E	80	81	AC2	21RA405AC*	113	63	19	+0.036 +0.015	35	52.4
	104	105	AD2	21RA405AD*						
	120	121	AE2	21RA405AE*						
	140	141	AF2	21RA405AF*						
	160	161	AG2	21RA405AG*						
	80	81	AH2	21RA405AH*	123	63	24	+0.036 +0.015	45	77.8
	104	105	AJ2	21RA405AJ*						
	120	121	AK2	21RA405AK*						
	140	141	AL2	21RA405AL*						
	160	161	AM2	21RA405AM*						
	80	81	AN2	21RA405AN*	120.5	63	24H7	+0.021 0	47.5	77.8
	104	105	AP2	21RA405AP*						
	120	121	AQ2	21RA405AQ*						
	140	141	AR2	21RA405AR*						
	160	161	AT2	21RA405AT*						
RA-40E	80	81	AZ3	31RA405AZ*	132.5	63	24	+0.036 +0.015	45	77.8
	104	105	BA3	31RA405BA*						
	120	121	BB3	31RA405BB*						
	152	153	BC3	31RA405BC*						
	80	81	AB3	31RA405AB*	150	68	32	+0.043 +0.018	50.5	170.8
	104	105	AC3	31RA405AC*						
	120	121	AD3	31RA405AD*						
	152	153	AE3	31RA405AE*						
	80	81	AF3	31RA405AF*	120	63	19H7	+0.021 0	37.5	52.4
	104	105	AG3	31RA405AG*						
	120	121	AH3	31RA405AH*						
	152	153	AJ3	31RA405AJ*						
	80	81	AK3	31RA405AK*	127.5	63	24H7	+0.021 0	45	77.8
	104	105	AL3	31RA405AL*						
	120	121	AM3	31RA405AM*						
	152	153	AN3	31RA405AN*						
RA-80E	80	81	XX4	41RA405X*	128.5	68	24	+0.036 +0.015	45	77.8
	100	101	XY4	41RA405Y*						
	120	121	XZ4	41RA405Z*						
	152	153	AA4	41RA405AA*						
	80	81	AB4	41RA405AB*	136	68	32	+0.043 +0.018	50.5	170.8
	100	101	AC4	41RA405AC*						
	120	121	AD4	41RA405AD*						
	152	153	AE4	41RA405AE*						
	80	81	AF4	41RA405AF*	131	68	19H7	+0.021 0	37.5	52.4
	100	101	AG4	41RA405AG*						
	120	121	AH4	41RA405AH*						
	152	153	AJ4	41RA405AJ*						
	80	81	AK4	41RA405AK*	157	68	35	+0.035 +0.010	72.5	106.5
	100	101	AL4	41RA405AL*						
	120	121	AM4	41RA405AM*						
	152	153	AN4	41RA405AN*						
	80	81	AP4	41RA405AP*	135	68	24H7	+0.021 0	41.5	77.8
	100	101	AQ4	41RA405AQ*						
	120	121	AR4	41RA405AR*						
	152	153	AT4	41RA405AT*						
RA-160E	80	81	XQ5	51RA405Q*	164	84	32	+0.043 +0.018	50	170.8
	100	101	XR5	51RA405R*						
	128	129	XT5	51RA405T*						
	144	145	XU5	51RA405U*						
	170	171	XW5	51RA405W*						
	80	81	XX5	51RA405X*	180	84	35	+0.035 +0.010	67	251.7
	100	101	XY5	51RA405Y*						
	128	129	XZ5	51RA405Z*						
	144	145	AA5	51RA405AA*						
	170	171	AB5	51RA405AB*						
	80	81	AC5	51RA405AC*	160	84	24H7	+0.021 0	43	77.8
	100	101	AD5	51RA405AD*						
	128	129	AE5	51RA405AE*						
	144	145	AF5	51RA405AF*						
	170	171	AG5	51RA405AG*						

The asterisk (*) at the end of the order item number will be replaced with our revision number. It is subject to change without notice.
The drawing above shows a representative model. The actual model may differ from the drawing.

1/10 tapered shaft

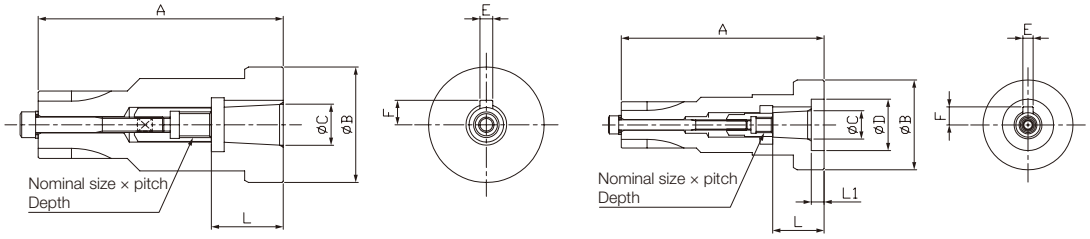

Model	Speed ratio		Input gear code	Order item number	Input gear dimensions (mm)										Threaded portion		
	EA	EC			A	ØB	ØC		ØD	L	L1	E		F		Nominal size	Pitch	Depth
RA-20E	80	81	BA2	21RA406BA*	79	35	11	+0.1 0	20	20	5	4	+0.040 +0.010	7	+0.2 0	M6	P1.0	8.5
	104	105	BB2	21RA406BB*														
	120	121	BC2	21RA406BC*														
	140	141	BD2	21RA406BD*														
	160	161	BE2	21RA406BE*														
	80	81	BF2	21RA406BF*	89	35	14	+0.1 0	-	18	-	4	+0.040 +0.010	8.5	+0.2 0	M8	P1.0	14
	104	105	BG2	21RA406BG*														
	120	121	BH2	21RA406BH*														
	140	141	BJ2	21RA406BJ*														
	160	161	BK2	21RA406BK*														
RA-40E	80	81	AP3	31RA406AP*	119.5	35	16	+0.1 0	-	28	-	5	+0.040 +0.010	9.5	+0.2 0	M10	P1.25	16
	104	105	AQ3	31RA406AQ*														
	120	121	AR3	31RA406AR*														
	152	153	AT3	31RA406AT*														
	80	81	AU3	31RA406AU*	93.5	35	14	+0.1 0	-	18	-	4	+0.040 +0.010	8.5	+0.2 0	M8	P1.0	14
	104	105	AW3	31RA406AW*														
	120	121	AX3	31RA406AX*														
	152	153	AY3	31RA406AY*														
RA-80E	80	81	AU4	41RA406AU*	95.5	45	16	+0.1 0	-	28	-	5	+0.040 +0.010	9.5	+0.2 0	M10	P1.25	16
	100	101	AW4	41RA406AW*														
	120	121	AX4	41RA406AX*														
	152	153	AY4	41RA406AY*														
	80	81	AZ4	41RA406AZ*	141.5	50	32	+0.1 0	-	58	-	7	+0.080 +0.043	17.75	+0.2 0	M20	P1.5	23
	100	101	BA4	41RA406BA*														
	120	121	BB4	41RA406BB*														
	152	153	BC4	41RA406BC*														
RA-160E	80	81	AH5	51RA406AH*	170	50	32	+0.1 0	-	58	-	7	+0.080 +0.043	17.75	+0.2 0	M20	P1.5	23
	100	101	AJ5	51RA406AJ*														
	128	129	AK5	51RA406AK*														
	144	145	AL5	51RA406AL*														
	170	171	AM5	51RA406AM*														
	80	81	AN5	51RA406AN*	134	50	16	+0.1 0	-	28	-	5	+0.040 +0.010	9.5	+0.2 0	M10	P1.25	16
	100	101	AP5	51RA406AP*														
	128	129	AQ5	51RA406AQ*														
	144	145	AR5	51RA406AR*														
	170	171	AT5	51RA406AT*														

Round type

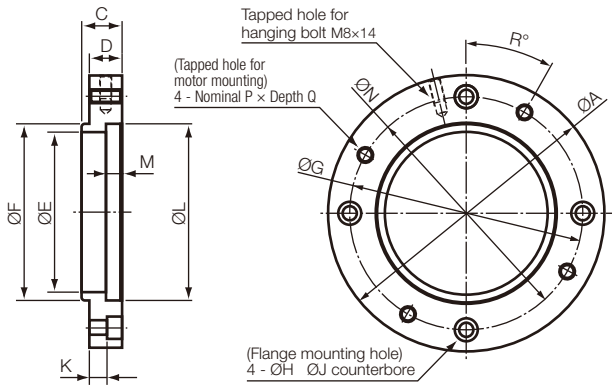

Model	Motor flange code	Order item number	Flange outer dimensions (mm)				Reduction gear mounting dimensions (mm)						Motor mounting dimensions (mm)					
			ØA	C	D	ØE	ØF		ØG	ØH	ØJ	K	ØL		M	ØN	P	Q	R°
RA-20E	2XB	21RA203B*	123	19	15	70	80h7	0 -0.030	100	6.6	11	7	80H7	+0.030 0	6	100	M6	15	45
	2XD	21RA203D*	123	34	30	70	80h7	0 -0.030	100	6.6	11	7	80	+0.037 +0.012	10	100	M6	15	45
RA-80E	4XR	20S203R*	170	30	25	100	110h7	0 -0.035	145	9	14	10	110H7	+0.035 0	10	145	M8	20	30
	4XT	20S203T*	170	25	20	100	110h7	0 -0.035	145	9	14	10	110	+0.038 +0.013	10	130	M8	20	30
	4XU	20S203U*	170	40	35	100	110h7	0 -0.035	145	9	14	10	110H7	+0.035 0	10	145	M8	20	30
	4AA	20S203AA*	190	55	50	100	110h7	0 -0.035	150	9	14	10	130	+0.039 +0.014	10	165	M10	20	45
	4AB	20S203AB*	190	35	30	100	110h7	0 -0.035	150	9	14	10	130	+0.039 +0.014	10	165	M10	20	45
RA-160E	5XS	20S203-*	170	25	20	100	110h7	0 -0.035	145	9	14	10	110H7	+0.035 0	10	145	M8	20	30
	5XY	20S203Y*	190	25	20	100	110h7	0 -0.035	150	9	14	10	130	+0.039 +0.014	10	165	M10	20	45

The asterisk (*) at the end of the order item number will be replaced with our revision number. It is subject to change without notice.
The drawing above shows a representative model. The actual model may differ from the drawing.

Square type

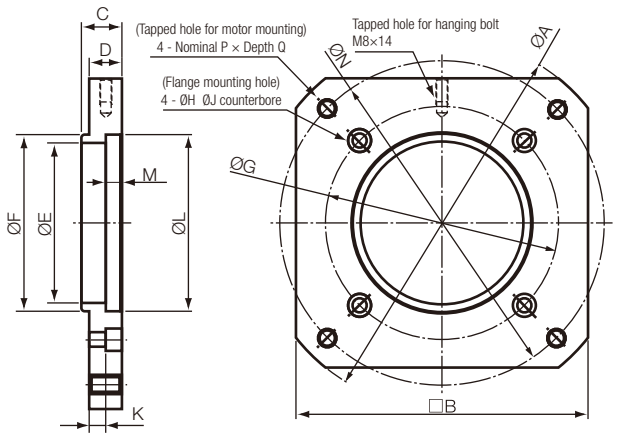

Model	Motor flange code	Order item number	Flange outer dimensions (mm)					Reduction gear mounting dimensions (mm)						Motor mounting dimensions (mm)					
			ØA	□B	C	D	ØE	ØF		ØG	ØH	ØJ	K	ØL		M	ØN	P	Q
RA-20E	2XC	21RA203C*	165	130	59	55	70	80h7	0 -0.030	95	6.6	11	7	110H7	+0.035 0	10	145	M8	20
	2XE	21RA203E*	165	130	59	55	70	80h7	0 -0.030	95	6.6	11	7	110	+0.038 +0.013	10	130	M8	20
	2XF	21RA203F*	165	130	44	40	70	80h7	0 -0.030	95	6.6	11	7	110	+0.038 +0.013	10	130	M8	20
	2XG	21RA203G*	165	130	44	40	70	80h7	0 -0.030	95	6.6	11	7	110H7	+0.035 0	10	145	M8	20
RA-40E	3XA	10S203A*	165	130	35	30	72	80h7	0 -0.030	95	9	14	10	110H7	+0.035 0	11	145	M8	20
	3XF	10S203F*	165	130	55	50	72	80h7	0 -0.030	95	9	14	10	110H7	+0.035 0	11	145	M8	20
	3AG	10S203AG*	165	130	45	40	72	80h7	0 -0.030	95	9	14	10	110	+0.038 +0.013	10	130	M8	20
	3AH	10S203AH*	190	150	55	50	72	80h7	0 -0.030	95	9	14	10	130	0.039 +0.014	12	165	M10	20
	3AJ	10S203AJ*	165	130	35	30	72	80h7	0 -0.030	95	9	14	10	110	+0.038 +0.013	10	130	M8	20
RA-80E	4XQ	20S203Q*	230	180	75	70	100	110h7	0 -0.035	145	9	14	10	114.3H7	+0.035 0	10	200	M12	20
	4AC	20S203AC*	230	180	55	50	100	110h7	0 -0.035	145	9	14	10	114.3H7	+0.035 0	10	200	M12	20
RA-160E	5XD	20S203D*	230	180	65	60	100	110h7	0 -0.035	145	9	14	10	114.3H7	+0.035 0	10	200	M12	20
	5XZ	20S203Z*	230	180	45	40	100	110h7	0 -0.035	145	9	14	10	114.3H7	+0.035 0	10	200	M12	20

The asterisk (*) at the end of the order item number will be replaced with our revision number. It is subject to change without notice.
The drawing above shows a representative model. The actual model may differ from the drawing.

Technical Information

Considering the use of the RA Series

This product features high precision and high rigidity, however, it is necessary to strictly comply with various restrictions and make appropriate to maximize the product's features. Please read this technical document thoroughly and select and adopt an appropriate model based on the actual operating environment, method, and conditions at your facility.

Export

- When this product is exported from Japan, it may be subject to the export regulations provided in the "Foreign Exchange Order and Export Trade Control Order". Be sure to take sufficient precautions and perform the required export procedures in advance if the final operating party is related to the military or the product is to be used in the manufacture of weapons, etc.

Application

- If failure or malfunction of the product may directly endanger human life or if it is used in units which may injure the human body (atomic facilities, space equipment, medical equipment, safety units, etc.), examination of individual situations is required. Contact our agent or nearest business office in such a case.

Safety measures

- Although this product has been manufactured under strict quality control, a mistake in operation or misuse can result in breakdown or damage, or an accident resulting in injury or death. Be sure to take all appropriate safety measures, such as the installation of independent safeguards.

Product specifications indicated in this catalog

- The specifications indicated in this catalog are based on Nabtesco evaluation methods. This product should only be used after confirming that it is appropriate for the operating conditions of your system.

Operating environment

Use the reduction gear under the following environment:

- Location where the ambient temperature is within the range from -10°C to 40°C.
- Location where the humidity is less than 85% and no condensation occurs.
- Location where the altitude is less than 1000 m.
- Well-ventilated location

Do not install the reduction gear at the following locations.

- Locations where a lot of dust is collected.
- Outdoor areas that are directly affected by wind and rain
- Locations near to areas that contains combustible, explosive, or corrosive gases and flammable materials.
- Locations that are heated due to heat transfer and radiation from peripherals and direct sun.
- Locations where the performance of the motor can be affected by magnetic fields or vibration.

Note 1: If the required operating environment cannot be established/met, contact us in advance.

2: When using the reduction gear under special conditions (clean room, equipment for food, concentrated alkali, high-pressure steam, etc.), contact our agent or nearest business office in advance.

Maintenance

- The standard replacement time for lubricant is 20,000 hours. However, when operation involves a reduction gear surface temperature above 40°C, the state of degradation of the lubricant should be checked in advance of that and the grease replaced earlier as necessary.

Reduction gear temperature

- When the reduction gear is used under high load and at a high duty ratio, it may overheat and the surface temperature may exceed the allowable temperature. Be aware of conditions so that the surface temperature of the reduction gear does not exceed 60°C while it is in operation. There is a possibility of damage (to the product) if the surface temperature exceeds 60°C.

Reduction gear output rotation angle

- When the range of the rotation angle is small (10 degrees or less), the service life of the reduction gear may be reduced due to poor lubrication or the internal parts being subject to a concentrated load.

  Note: Contact us in case the rotation angle is 10 degrees or less.

Manuals

- Safety information and detail product instructions are indicated in the operation manual.
  The operation manual can be downloaded from the following website.
  http://precision.nabtesco.com/

Glossary

Rated service life

The lifetime resulting from the operation with the rated torque and the rated output speed is referred to as the “rated service life”.

Allowable acceleration/deceleration torque

When the machine starts or stops, the load torque to be applied to the reduction gear is larger than the constant-speed load torque due to the effect of the inertia torque of the rotating part. In such a situation, the allowable torque during acceleration/deceleration is referred to as “allowable acceleration/deceleration torque”.

Note: Be careful that the load torque, which is applied at startup and stop, does not exceed the allowable acceleration/deceleration torque.

Momentary maximum allowable torque

A large torque may be applied to the reduction gear due to execution of emergency stop or by an external shock. In such a situation, the allowable value of the momentary applied torque is referred to as “momentary maximum allowable torque”.

Note: Be careful that the momentary excessive torque does not exceed the momentary maximum allowable torque.

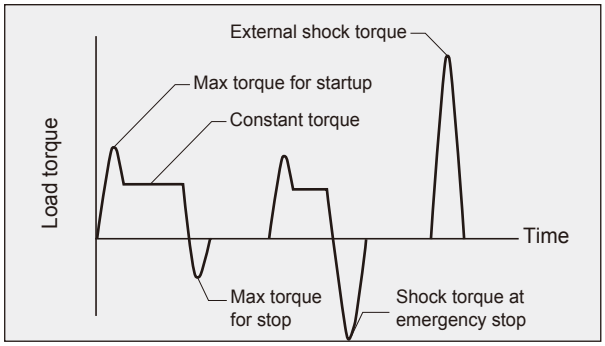

Allowable output speed

The allowable value for the reduction gear’s output speed during operation without a load is referred to as the “allowable output speed”.

Notes: Depending on the conditions of use (duty ratio, load, ambient temperature), the reduction gear temperature may exceed 60°C even when the speed is under the allowable output speed. In such a case, either take cooling measures or use the reduction gear at a speed that keeps the surface temperature at 60°C or lower.

Duty ratio

The duty ratio is defined as the ratio of the sum total time of acceleration, constant speed, and deceleration to the cycle time of the reduction gear.

Torsional rigidity, lost motion, backlash

When a torque is applied to the output shaft while the input shaft is fixed, torsion is generated according to the torque value. The torsion can be shown in the hysteresis curves.
The value of b/a is referred to as “torsional rigidity”.
The torsion angle at the mid point of the hysteresis curve width within ±3% of the rated torque is referred to as “lost motion”.
The torsion angle when the torque indicated by the hysteresis curve is equal to zero is referred to as “backlash”.

<Hysteresis curve>

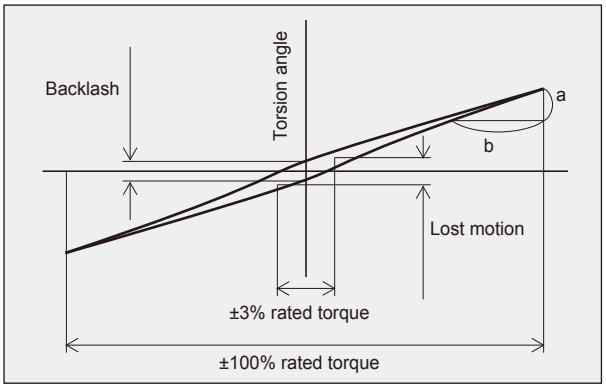

Startup efficiency

The efficiency of the moment when the reduction gear starts up is referred to as “startup efficiency”.

No-load running torque (input shaft)

The torque for the input shaft that is required to run the reduction gear without load is referred to as “no-load running torque”.

Allowable moment and maximum thrust load

The external load moment may be applied to the reduction gear during normal operation. The allowable values of the external moment and the external axial load at this time are each referred to as “allowable moment” and “maximum thrust load”.

Momentary maximum allowable moment

A large moment may be applied to the reduction gear due to an emergency stop or external shock. The allowable value of the momentary applied moment at this time is referred to as “momentary maximum allowable moment.”

Note: Be careful so that the momentary excessive moment does not exceed the momentary maximum allowable moment.

Product selection flowchart

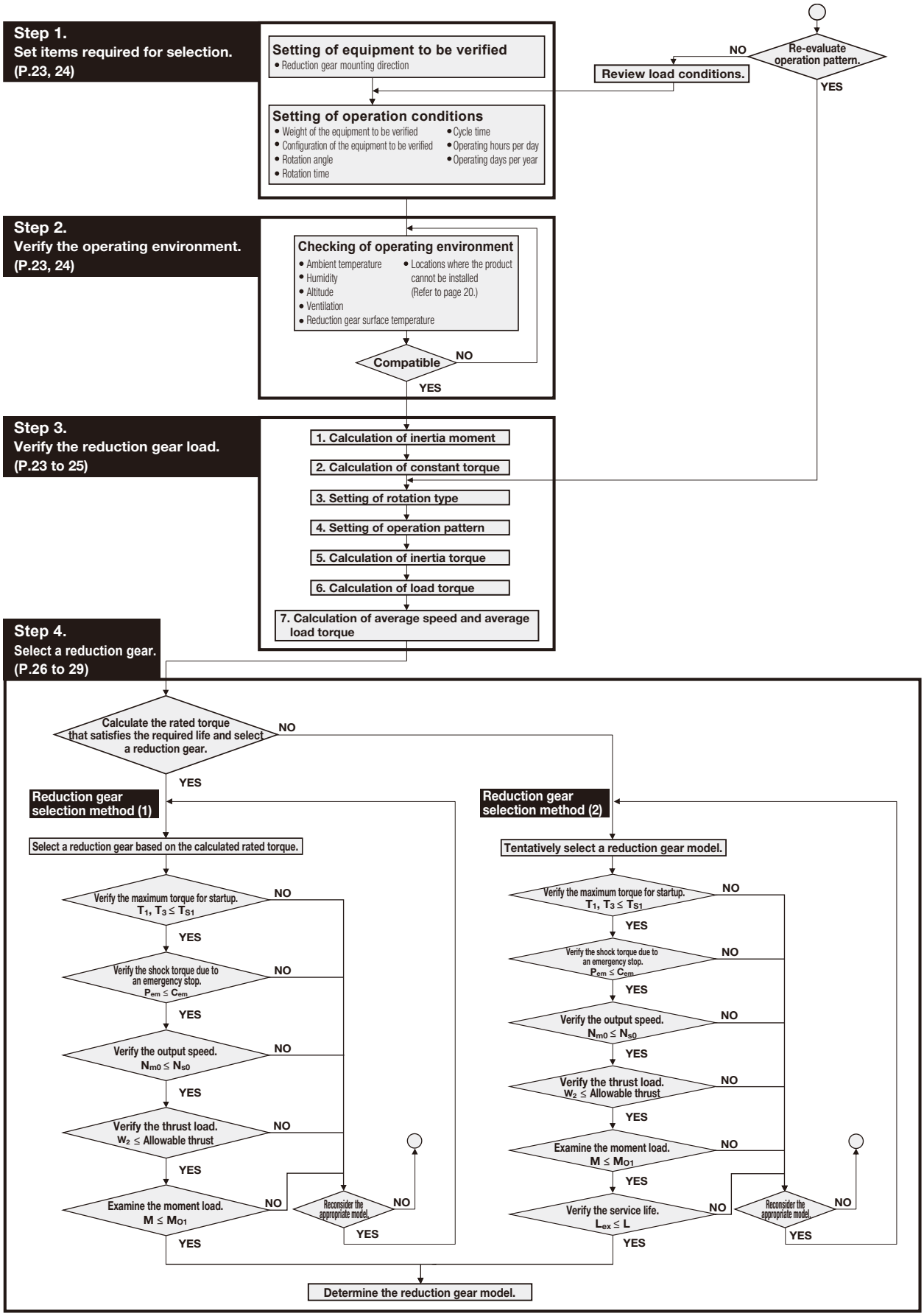

A limitation is imposed on the motor torque value according to the momentary maximum allowable torque of the selected reduction gear. (Refer to page 30.)

Model code selection examples

With horizontal rotational transfer

Step 1. Set the items required for selection.

Setting item	Setting
Reduction gear mounting direction	Vertical shaft installation
Equipment weight to be considered	
W_A ——— Disk weight (kg)	180
W_B ——— Work weight (kg)	20×4 pieces
Equipment configuration to be considered	
D_1 ——— Disk: D dimension (mm)	1,200
a ——— Workpiece: a dimension (mm)	100
b ——— Workpiece: b dimension (mm)	300
D_2 ——— Workpiece: P.C.D. (mm)	1,000
Operation conditions	
θ ——— Rotation angle (°)*1	180
$[t_1+t_2+t_3]$ ——— Rotation time (s)	2.5
$[t_4]$ ——— Cycle time (s)	20
Q_1 ——— Equipment operation hours per day (hours/day)	12
Q_2 ——— Equipment operation days per year (days/year)	365

*1. When the range of the rotation angle is small (10 degrees or less), the rating life of the reduction gear may be reduced due to poor lubrication or the internal parts being subject to a concentrated load.

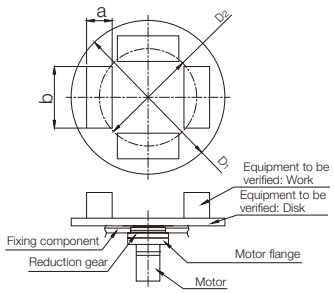

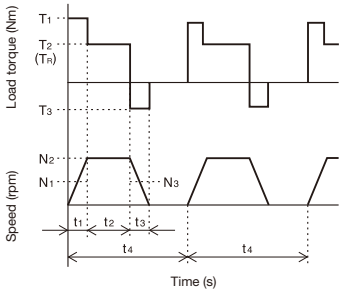

Step 2. Verify the operating environment.

Checkpoint	Standard value
S_0 ——— Ambient temperature (°C)	-10 to +40
S_1 ——— Reduction gear surface temperature (°C)	60 or less

Note: Refer to "Operating environment" on p. 20 for values other than those listed above.

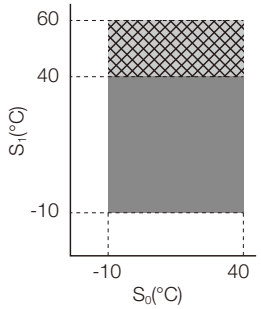

Step 3-1. Examine the reduction gear load.

Setting item		Calculation formula	Selection examples
(1) Calculate the inertia moment based the calculation formula on page 36.			
I_R	Load inertia moment (kgm^2)	$I_{R1}=\dfrac{W_A\times\left(\dfrac{D_1}{2\times1{,}000}\right)^2}{2}$ $I_{R2}=\left[\dfrac{W_B}{12}\left\{\left(\dfrac{a}{1{,}000}\right)^2+\left(\dfrac{b}{1{,}000}\right)^2\right\}+W_B\times\left(\dfrac{D_2}{2\times1{,}000}\right)^2\right]\times n$ I_{R1} = Disk inertia moment I_{R2} = Work inertia $I_R = I_{R1}+I_{R2}$ n = Number of Workpieces	$I_{R1}=\dfrac{180\times\left(\dfrac{1{,}200}{2\times1{,}000}\right)^2}{2}$ $=32.4\ (kgm^2)$ $I_{R2}=\left[\dfrac{20}{12}\left\{\left(\dfrac{100}{1{,}000}\right)^2+\left(\dfrac{300}{1{,}000}\right)^2\right\}+20\times\left(\dfrac{1{,}000}{2\times1{,}000}\right)^2\right]\times4$ $=20.7\ (kgm^2)$ $I_R=32.4+20.7$ $=53.1\ (kgm^2)$
(2) Examine the constant torque.			
T_R	Constant torque (Nm)	$T_R=(W_A+W_B)\times9.8\times\dfrac{D_{in}}{2\times1{,}000}\times\mu$ μ = Friction factor Note: Use 0.015 for this example as the load is applied to the bearing of the precision reduction gear. D_{in} = Rolling diameter: Use the pilot diameter which is almost equivalent to the rolling diameter in this selection calculation. Note: If the reduction gear model is not determined, select the following pilot diameter: Maximum pilot diameter: 240 (mm) (RA-160EA)	$T_R=(180+20\times4)\times9.8\times\dfrac{240}{2\times1{,}000}\times0.015$ $=4.6\ (Nm)$

Step 3-2: Proceed to p. 25.

Model code selection examples

With vertical rotational transfer

Step 1. Set the items required for selection.

Setting item	Setting
Reduction gear mounting direction	Horizontal shaft installation
Equipment weight to be considered	
W_C ——— Mounted work weight (kg)	490
Equipment configuration to be considered	
a ——— a dimension (mm)	500
b ——— b dimension (mm)	500
R ——— R dimension (mm)	320
Operation conditions	
θ ——— Rotation angle (°)*1	90
$[t_1+t_2+t_3]$ —— Rotation time (s)	1.5
$[t_4]$ ——— Cycle time (s)	20
Q_1 ——— Equipment operation hours per day (hours/day)	24
Q_2 ——— Equipment operation days per year (days/year)	365

*1. When the range of the rotation angle is small (10 degrees or less), the rating life of the reduction gear may be reduced due to poor lubrication or the internal parts being subject to a concentrated load.

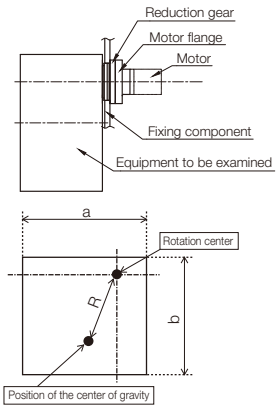

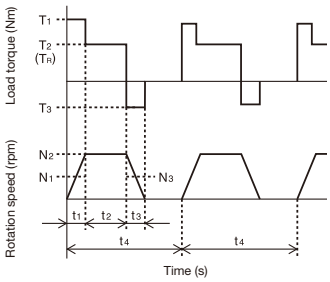

Step 2. Verify the operating environment.

Checkpoint	Standard value
S_0 ——— Ambient temperature (°C)	-10 to +40
S_1 ——— Reduction gear surface temperature (°C)	60 or less

Note: Refer to "Operating environment" on p. 20 for values other than those listed above.

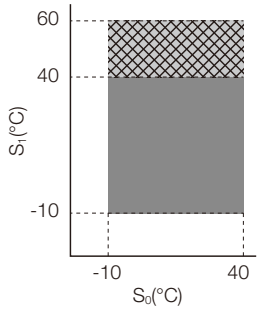

Step 3-1. Examine the reduction gear load.

Setting item		Calculation formula	Selection examples
(1) Calculate the inertia moment.			
I_R	Load inertia moment (kgm^2)	$I_R=\frac{W_C}{12}\times\left\{\left(\frac{a}{1{,}000}\right)^2+\left(\frac{b}{1{,}000}\right)^2\right\}+W_C\times\left(\frac{R}{1{,}000}\right)^2$	$I_R=\frac{490}{12}\times\left\{\left(\frac{500}{1{,}000}\right)^2+\left(\frac{500}{1{,}000}\right)^2\right\}+490\times\left(\frac{320}{1{,}000}\right)^2$ $=70.6\ (kgm^2)$
(2) Examine the constant torque.			
T_R	Constant torque (Nm)	$T_R=W_C\times9.8\times\frac{R}{1{,}000}$	$T_R=490\times9.8\times\frac{320}{1{,}000}$ $=1{,}537\,(Nm)$

Step 3-2: Proceed to p. 25.
(Refer to "With horizonta5rotational transfer" for selection examples.)

Step 3-2. Set items required for selection

Setting item	Calculation formula	Selection examples (With horizontal rotational transfer)
(3) Set the rotation type.		
Reduction gear rotation type		Case rotation type (RA-EA series)
(4) Set the acceleration/deceleration time, constant-speed operation time, and output speed.		
t_1 ——— Acceleration time (s) t_2 ——— Constant-speed operation time (s) t_3 ——— Deceleration time (s) N_2 ——— Constant speed (rpm)	• The operation pattern does not need to be verified if it is already set. • If the operation pattern has not been determined, use the following formula to calculate the reference operation pattern. $t_1 = t_3 = \text{Rotation } [\, t_1 + t_2 + t_3 \,] - \dfrac{\theta}{\left(\dfrac{N_2}{60} \times 360\right)}$ $t_2 = \text{Rotation } [\, t_1 + t_2 + t_3 \,] - (t_1 + t_3)$ Note: 1. Assume that t_1 and t_3 are the same. Note: 2. N_2 = 15 rpm if the reduction gear output speed (N_2) is not known. Note: 3. If t_1 and t_3 is less than 0, increase the output speed or extend the rotation time.	Examine the operation pattern using N_2 = 15 rpm as the reduction gear output speed is unknown. $t_1 = t_3 = 2.5 - \dfrac{180}{\left(\dfrac{15}{60} \times 360\right)} = 0.5$ (s) $t_2 = 2.5 - (0.5 + 0.5) = 1.5$ (s) $\therefore t_1 = t_3 = 0.5$ (s) $t_2 = 1.5$ (s) $N_2 = 15$ (rpm)
N_1 ——— Average speed for startup (rpm)	$N_1 = \dfrac{N_2}{2}$	$N_1 = \dfrac{15}{2} = 7.5$ (rpm)
N_3 ——— Average speed for stop (rpm)	$N_3 = \dfrac{N_2}{2}$	$N_3 = \dfrac{15}{2} = 7.5$ (rpm)
(5) Calculate the inertia torque for acceleration/deceleration.		
T_A ——— Inertia torque for acceleration (Nm)	$T_A = \left\{\dfrac{I_R \times (N_2 - 0)}{t_1}\right\} \times \dfrac{2\pi}{60}$	$T_A = \left\{\dfrac{53.1 \times (15 - 0)}{0.5}\right\} \times \dfrac{2\pi}{60}$ = 166.8 (Nm)
T_D ——— Inertia torque for deceleration (Nm)	$T_D = \left\{\dfrac{I_R \times (0 - N_2)}{t_3}\right\} \times \dfrac{2\pi}{60}$	$T_D = \left\{\dfrac{53.1 \times (0 - 15)}{0.5}\right\} \times \dfrac{2\pi}{60}$ = −166.8 (Nm)
(6) Calculate the load torque for acceleration/deceleration.		
T_1 ——— Maximum torque for startup (Nm)	$T_3 = \lvert T_A + T_R \rvert$ T_R: Constant torque With horizontal rotational transfer Refer to page 23 With vertical rotational transfer Refer to page 24	$T_1 = \lvert 166.8 + 4.6 \rvert$ = 171.4 (Nm)
T_2 ——— Constant maximum torque (Nm)	$T_2 = \lvert T_R \rvert$	$T_2 = 4.6$ (Nm)
T_3 ——— Maximum torque for stop (Nm)	$T_3 = \lvert T_A + T_R \rvert$ T_R: Constant torque With horizontal rotational transfer Refer to page 23 With vertical rotational transfer Refer to page 24	$T_3 = \lvert -166.8 + 4.6 \rvert$ = 162.2 (Nm)
(7)-1 Calculate the average speed.		
N_m ——— Average speed (rpm)	$N_m = \dfrac{t_1 \times N_1 + t_2 \times N_2 + t_3 \times N_3}{t_1 + t_2 + t_3}$	$N_m = \dfrac{0.5 \times 7.5 + 1.5 \times 15 + 0.5 \times 7.5}{0.5 + 1.5 + 0.5}$ = 12 (rpm)
(7)-2 Calculate the average load torque.		
T_m ——— Average load torque (Nm)	$T_m = \sqrt[10/3]{\dfrac{t_1 \times N_1 \times T_1^{10/3} + t_2 \times N_2 \times T_2^{10/3} + t_3 \times N_3 \times T_3^{10/3}}{t_1 \times N_1 + t_2 \times N_2 + t_3 \times N_3}}$	$T_m = \sqrt[10/3]{\dfrac{0.5 \times 7.5 \times 171.4^{10/3} + 1.5 \times 15 \times 4.6^{10/3} + 0.5 \times 7.5 \times 162.2^{10/3}}{0.5 \times 7.5 + 1.5 \times 15 + 0.5 \times 7.5}}$ = 110.1 (Nm)

Go to page 26 if the reduction gear model is verified based on the required life.
Go to page 28 if the service life is verified based on the reduction gear model.

Model code selection examples

Step 4. Select a reduction gear

Reduction gear selection method (1) Calculate the required torque based on the load conditions and required life and select a reduction gear.

Setting/verification item	Calculation formula	Selection examples (With horizontal rotational transfer)
(1) Calculate the rated torque for the reduction gear that satisfies the required life.		
L_{ex} ——— Required life (year)	Based on the operation conditions	5 years
Q_{1cy} ——— Number of cycles per day (times)	$Q_{1cy} = \frac{Q_1 \times 60 \times 60}{t_4}$	$Q_{1cy} = \frac{12 \times 60 \times 60}{20}$ = 2,160 (times)
Q_3 ——— Operating hours of reduction gear per day (h)	$Q_3 = \frac{Q_{1cy} \times (t_1 + t_2 + t_3)}{60 \times 60}$	$Q_3 = \frac{2{,}160 \times (0.5 + 1.5 + 0.5)}{60 \times 60}$ = 1.5 (h)
Q_4 ——— Operating hours of reduction gear per year (h)	$Q_4 = Q_3 \times Q_2$	Q_4 = 1.5×365 = 548 (h)
L_{hour} ——— Reduction gear service life (h)	$L_{hour} = Q_4 \times L_{ex}$	L_{hour} = 548 × 5 = 2,740 (h)
T_O' ——— Reduction gear rated torque that satisfies the required life (Nm)	$T_O' = T_m \times \sqrt[\frac{10}{3}]{\frac{L_{hour}}{K} \times \frac{N_m}{N_0}}$ K : Reduction gear rated life (h) N_0 : Reduction gear rated output speed (rpm)	$T_O' = 110.1 \times \sqrt[\frac{10}{3}]{\frac{2{,}740}{6{,}000} \times \frac{12}{15}}$ = 81.5 (Nm)
(2) Tentatively select a reduction gear model based on the calculated rated torque.		
Tentative selection of the reduction gear	Select a reduction gear for which the rated torque of the reduction gear [T_O]*1 is equal to or greater than the rated torque of the reduction gear that satisfies the required life [T_O']. *1 [T_O]: Refer to the rating table on page 8	RA-20EA that meets the following condition is tentatively selected: [T_O] 167 (Nm) ≥ [T_O'] 81.5 (Nm)
(3) Verify the maximum torque for startup and stop.		
Verification of maximum torque for startup and stop	Check the following conditions: The allowable acceleration/deceleration torque [T_{S1}]*1 is equal to or greater than the maximum starting torque [T_1]*2 and maximum stopping torque [T_3]*2 If the tentatively selected reduction gear is outside of the specifications, change the reduction gear model. *1 [T_{S1}]: Refer to the rating table on page 8 *2 [T_1] and [T_3]: Refer to page 24	[T_{S1}] 412 (Nm) ≥ [T_1] 171.4 (Nm) [T_3] 162.2 (Nm) According to the above conditions, the tentatively selected model should be no problem.
(4) Verify the output speed.		
N_{m0} ——— Average speed per cycle (rpm)	$N_{m0} = \frac{t_1 \times N_1 + t_2 \times N_2 + t_3 \times N_3}{t_4}$	$N_{m0} = \frac{0.5 \times 7.5 + 1.5 \times 15 + 0.5 \times 7.5}{20}$ = 1.5 (rpm)
Verification of output speed	Check the following condition: The allowable output speed (100% duty ratio) [N_{S0}]*1 is equal to or greater than the average speed per cycle [N_{m0}] If the tentatively selected reduction gear is outside of the specifications, change the reduction gear model. Contact us regarding use of the model at a speed outside the allowable output speed (40% duty ratio) [N_{S1}]*1. Note: The value of [N_{S0}] is the speed at which the case temperature is balanced at 60ºC for 30 minutes. *1 [N_{S0}] and [N_{S1}]: Refer to the rating table on page 9	[N_{S0}] 45 (rpm) ≥ [N_{m0}] 1.5 (rpm) According to the above condition, the tentatively selected model should be no problem.

Reduction gear selection method (1) Calculate the required torque based on the load conditions and required life and select a reduction gear.

Setting/verification item	Calculation formula	Selection examples (With horizontal rotational transfer)
(5) Verify the shock torque at the time of an emergency stop.		
P_{em} ——— Expected number of emergency stop times (times)	Based on the operation conditions.	For example, an emergency stop occurs once a month. [P_{em}] = 1 x 12 x required life (year) [L_{ex}] = 12 x 5 = 60 (times)
T_{em} ——— Shock torque due to an emergency stop (Nm)	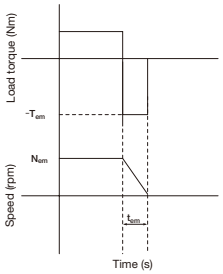 Set the operation conditions that meet the following requirement: Shock torque due to an emergency stop [T_{em}] is equal to or less than the momentary maximum allowable torque [T_{S2}]	For example, [T_{em}] = 500 (Nm)
N_{em} ——— Speed at the time of an emergency stop (rpm)		For example, [N_{em}] = 15 (rpm)
t_{em} ——— Deceleration time at the time of an emergency stop (s)		For example, [t_{em}] = 0.05 (s)
Z_4 ——— Number of pins for reduction gear	Model / Number of pins (Z_4): RA-20EA, RA-40EA, RA-80EA, RA-160EA — 40 Model / Number of pins (Z_4): RA-20EC, RA-40EC, RA-80EC, RA-160EC — 40	Number of pins for RA-20E: 40
C_{em} ——— Allowable number of shock torque application times	$C_{em} = \dfrac{775 \times \left(\dfrac{T_{S2}}{T_{em}}\right)^{\frac{10}{3}}}{Z_4 \times \dfrac{N_{em}}{60} \times t_{em}}$ Note [T_{S2}]: Momentary maximum allowable torque, refer to the rating table on page 8	$C_{em} = \dfrac{775 \times \left(\dfrac{833}{500}\right)^{\frac{10}{3}}}{40 \times \dfrac{15}{60} \times 0.05}$ = 8,497 (times)
Verification of shock torque due to an emergency stop	Check the following condition: The allowable shock torque application count [C_{em}] is equal to or greater than the expected emergency stop count [P_{em}] If the tentatively selected reduction gear is outside of the specifications, change the reduction gear model.	[C_{em}] 8,497 ≥ [P_{em}] 60 According to the above condition, the tentatively selected model should be no problem.
(6) Verify the thrust load and moment load.		
W_1 ——— Radial load (N)	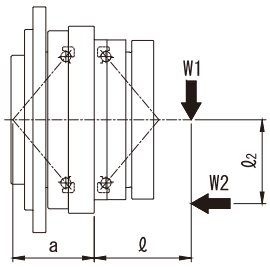	0 (N)
ℓ ——— Distance to the point of radial load application (mm)		0 (mm)
W_2 ——— Thrust load (N)		In this example, $W_2 = W_A + W_B = (180 + 20 \times 4) \times 9.8$ = 2,548 (N) Note W_A, W_B : Refer to page 23.
ℓ_2 ——— Distance to the point of thrust load application (mm)		0 (mm) (As the workpiece center is located on the rotation axis)
M ——— Moment load (Nm)	$M = \dfrac{W_1 \times (\ell + a) + W_2 \times \ell_2}{1{,}000}$ a: Refer to the calculation of the tilt angle on page 33.	RA-20EA As dimension a = 63.1 (mm): $M = \dfrac{0 \times (0 + 63.1) + 2{,}548 \times 0}{1{,}000}$ = 0 (Nm)
Verify the thrust load and moment load	Check that the thrust load and moment load are within the range in the allowable moment diagram on page 31. When radial load W_1 is applied within dimension b, use the reduction gear within the allowable radial load. Wr: Allowable radial load, see the rating table on page 9. If the tentatively selected reduction gear is outside of the specifications, change the reduction gear model.	For this example, Thrust load [W_2] = 2,548 (N) Moment load [M] = 0 (N) As the above values are within the range in the allowable moment diagram, the tentatively selected model should be no problem.
Select the reduction gear model that satisfies all the conditions of the above verification items. The actual reduction ratio is determined based on the motor speed, input torque, and inertia moment. Check with the motor manufacturer.		Based on the above verification result, RA-20EA is selected.

Model code selection examples

Reduction gear selection method (2): Tentatively select a reduction gear model and evaluate the service life.

Setting/verification item	Calculation formula	Selection examples (With horizontal rotational transfer)
(1) Tentatively select a desired reduction gear model.		
Tentative selection of a reduction gear	Tentatively select a desired reduction gear model.	For example, tentatively select RA-20EA.
(2) Verify the maximum torque for startup and stop.		
Verification of maximum torque for startup and stop	Check the following conditions: The allowable acceleration/deceleration torque [T_{S1}]*1 is equal to or greater than the maximum starting torque [T_1]*2 and maximum stopping torque [T_3]*2 If the tentatively selected reduction gear is outside of the specifications, change the reduction gear model. *1 [T_{S1}]: Refer to the rating table on page 8 *2 [T_1] and [T_3]: Refer to page 25	[T_{S1}] 412 (Nm) ≥ [T_1] 171.4 (Nm) [T_3] 162.2 (Nm) According to the above conditions, the tentatively selected model should be no problem.
(3) Verify the output speed.		
N_{m0} ——— Average speed per cycle (rpm)	$N_{m0} = \frac{t_1 \times N_1 + t_2 \times N_2 + t_3 \times N_3}{t_4}$	$N_{m0} = \frac{0.5 \times 7.5 + 1.5 \times 15 + 0.5 \times 7.5}{20}$ $= 1.5$ (rpm)
Verification of output speed	Check the following condition: The allowable output speed (100% duty ratio) [N_{S0}]*1 is equal to or greater than the average speed per cycle [N_{m0}] If the tentatively selected reduction gear is outside of the specifications, change the reduction gear model. Contact us regarding use of the model at a speed outside the allowable output speed (40% duty ratio) [N_{S1}]*1. Note: The value of [N_{S0}] is the speed at which the case temperature is balanced at 60ºC for 30 minutes. *1 [N_{S0}] and [N_{S1}]: Refer to the rating table on page 9	[N_{S0}] 45 (rpm) ≥ [N_{m0}] 1.5 (rpm) According to the above condition, the tentatively selected model should be no problem.
(4) Verify the shock torque at the time of an emergency stop.		
P_{em} ——— Expected number of emergency stop times (times)	Based on the operation conditions.	For example, an emergency stop occurs once a month. [P_{em}] = 1 x 12 x required life (year) [L_{ex}] = 12 x 5 = 60 (times)
T_{em} ——— Shock torque due to an emergency stop (Nm)	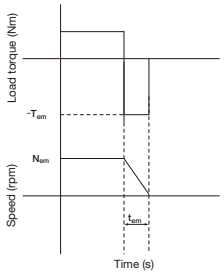 Shock torque due to an emergency stop [T_{em}] Set the operation conditions that meet the following requirement: Shock torque due to an emergency stop [T_{em}] is equal to or less than the momentary maximum allowable torque [T_{S2}]	For example, [T_{em}] = 500 (Nm)
N_{em} ——— Speed at the time of an emergency stop (rpm)		For example, [N_{em}] = 15 (rpm)
t_{em} ——— Deceleration time at the time of an emergency stop (s)		For example, [t_{em}] = 0.05 (s)
Z_4 ——— Number of pins for reduction gear	<table><tr><th>Model</th><th>Number of pins (Z_4)</th></tr><tr><td>RA-20EA</td><td rowspan="4">40</td></tr><tr><td>RA-40EA</td></tr><tr><td>RA-80EA</td></tr><tr><td>RA-160EA</td></tr></table><table><tr><th>Model</th><th>Number of pins (Z_4)</th></tr><tr><td>RA-20EC</td><td rowspan="4">40</td></tr><tr><td>RA-40EC</td></tr><tr><td>RA-80EC</td></tr><tr><td>RA-160EC</td></tr></table>	Number of pins for RA-20EA: 40
C_{em} ——— Allowable number of shock torque application times	$C_{em} = \frac{775 \times \left(\frac{T_{S2}}{T_{em}}\right)^{\frac{10}{3}}}{Z_4 \times \frac{N_{em}}{60} \times t_{em}}$ Note [T_{S2}]: Momentary maximum allowable torque, refer to the rating table on page 8	$C_{em} = \frac{775 \times \left(\frac{833}{500}\right)^{\frac{10}{3}}}{40 \times \frac{15}{60} \times 0.05} = 8{,}497$ (times)
Verification of shock torque due to an emergency stop	Check the following condition: The allowable shock torque application count [C_{em}] is equal to or greater than the expected emergency stop count [P_{em}] If the tentatively selected reduction gear is outside of the specifications, change the reduction gear model.	[C_{em}] 8,497 ≥ [P_{em}] 60 According to the above condition, the tentatively selected model should be no problem.

Reduction gear selection method (2): Tentatively select a reduction gear model and evaluate the service life.

Setting/verification item	Calculation formula	Selection examples (With horizontal rotational transfer)
(5) Verify the thrust load and moment load.		
W_1 ——— Radial load (N)	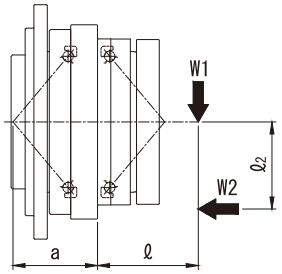	0 (N)
ℓ ——— Distance to the point of radial load application (mm)		0 (mm)
W_2 ——— Thrust load (N)		In this example, $W_2 = (180 + 20 \times 4) \times 9.8$ $= 2,548$ (N) Note W_A, W_B : Refer to page 23.
ℓ_2 ——— Distance to the point of thrust load application (mm)		0 (mm) (As the workpiece center is located on the rotation axis)
M ——— Moment load (Nm)	$M = \frac{W_1 \times (\ell + a) + W_2 \times \ell_2}{1,000}$ a: Refer to the calculation of the tilt angle on page 33.	RA-20EA As dimension a = 63.1 (mm): $M = \frac{0 \times (0 + 63.1) + 2,548 \times 0}{1,000}$ $= 0$ (Nm)
Verify the thrust load and moment load	Check that the thrust load and moment load are within the range in the allowable moment diagram on page 31. When radial load W_1 is applied within dimension b, use the reduction gear within the allowable radial load. Wr: Allowable radial load, see the rating table on page 9. If the tentatively selected reduction gear is outside of the specifications, change the reduction gear model.	For this example, Thrust load [W_2] = 2,548 (N) Moment load [M] = 0 (N) As the above values are within the range in the allowable moment diagram, the tentatively selected model should be no problem.
(6) Verify the reduction gear service life.		
L_h ——— Life (h)	$L_h = 6,000 \times \frac{N_0}{N_m} \times \left(\frac{T_0}{T_m}\right)^{\frac{10}{3}}$	$L_h = 6,000 \times \frac{15}{12} \times \left(\frac{167}{110.1}\right)^{\frac{10}{3}}$ $= 30,072$ (h)
Q_{1cy} ——— Number of cycles per day (times)	$Q_{1cy} = \frac{Q_1 \times 60 \times 60}{t_4}$	$Q_{1cy} = \frac{12 \times 60 \times 60}{20} = 2,160$ (times)
Q_3 ——— Operating hours per day (h)	$Q_3 = \frac{Q_{1cy} \times (t_1 + t_2 + t_3)}{60 \times 60}$	$Q_3 = \frac{2,160 \times (0.5 + 1.5 + 0.5)}{60 \times 60} = 1.5$ (h)
Q_4 ——— Operating hours per year (h)	$Q_4 = Q_3 \times Q_2$	$Q_4 = 1.5 \times 365 = 548$ (h)
L_{year} ——— Reduction gear service life (year)	$L_{year} = \frac{L_h}{Q_4}$	$L_{year} = \frac{30,072}{548} = 54.9$ (year)
L_{ex} ——— Required life (year)	Based on the operation conditions	5 years
Verification of the service life	Check the following condition: [L_{ex}] is equal to or less than [L_{year}] If the tentatively selected reduction gear is outside of the specifications, change the reduction gear model.	[L_{ex}] 5 (year) ≤ [L_{year}] 54.9 (year) According to the above condition, the tentatively selected model should be no problem.
Select the reduction gear model that satisfies all the conditions of the above verification items. The actual reduction ratio is determined based on the motor speed, input torque,and inertia moment. Check with the motor manufacturer.		Based on the above verification result, RA-20EA is selected.

Model code selection examples

Limitation on the motor torque

A limitation is imposed on the motor torque value so that the shock torque applied to the reduction gear does not exceed the momentary maximum allowable torque.

Setting/verification item	Calculation formula	Selection examples (With horizontal rotational transfer)
T_{M1} ——— Motor momentary maximum torque (Nm)	Determine based on the motor specifications.	For example, T_{M1} = 10 (Nm)
T_{M1OUT} ——— Maximum torque generated at the output shaft for the reduction gear (Nm) (When an external shock is applied at the time of an emergency stop or motor stop)	$T_{M1out} = T_{M1} \times R \times \frac{100}{\eta}$ R: Actual reduction ratio η : Startup efficiency (%), refer to the rating table on page 8	For example, calculate the maximum torque generated at the output shaft for the reduction gear based on the specifications when RA-20EA-160 was selected. $T_{M1out} = 10 \times 160 \times \frac{100}{75}$ = 2,133 (Nm)
T_{M2OUT} ——— Maximum torque generated at the output shaft for the reduction gear (Nm) (When a shock is applied to the output shaft due to hitting by an obstacle)	$T_{M2out} = T_{M1} \times R \times \frac{\eta}{100}$	$T_{M2out} = 10 \times 160 \times \frac{75}{100}$ = 1,200 (Nm)
Limitation on motor torque value	Check the following condition: The momentary maximum allowable torque [T_{S2}]*1 is equal to or greater than the maximum torque generated at the output shaft for the reduction gear [T_{M1OUT}] and [T_{M2OUT}] If the above condition is not satisfied, a limitation is imposed on the maximum torque value of the motor. *1 [T_{S2}]: Refer to the rating table on page 8	[T_{S2}] 833 (Nm) ≤ [T_{M1OUT}] 2,133 (Nm) and [T_{M2OUT}] 1,200 (Nm) According to the above condition, the torque limit is set for the motor.

Product selection

Allowable moment diagram

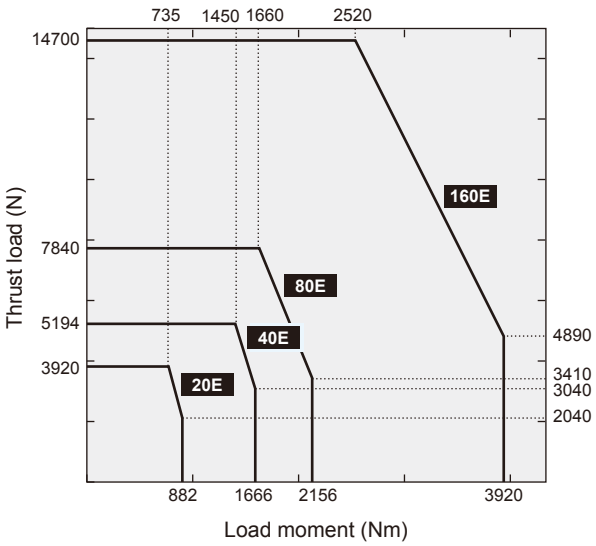

Technical data

No-load running torque

RA Series	Case temperature: 30°C Lubricant: Grease (Molywhite RE00)

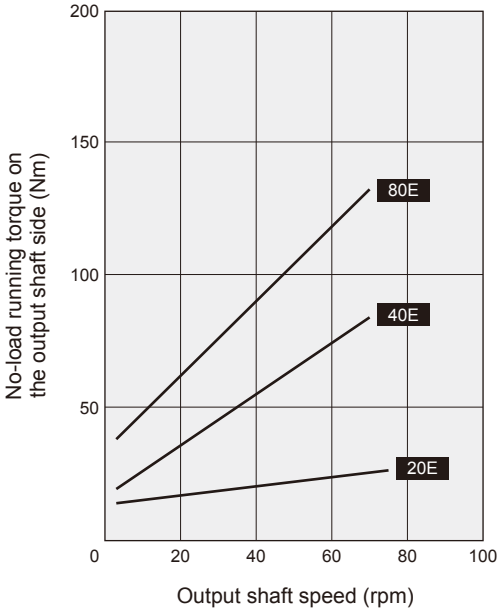

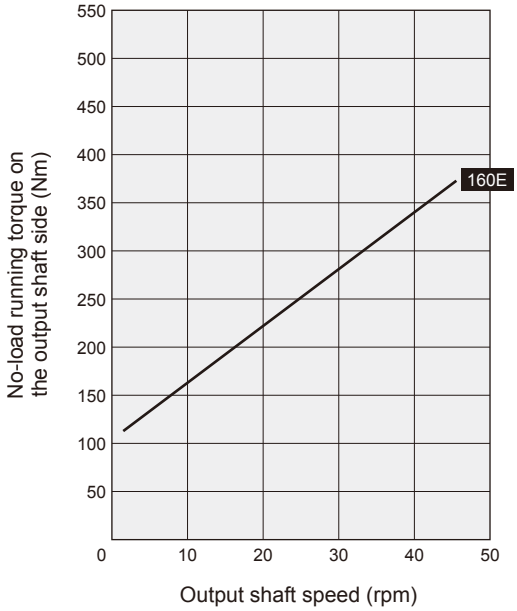

The no-load running torque that is converted to the input shaft side value should be calculated using the following equation:

$$\text{No-load running torque on the input shaft side (Nm)} = \frac{\text{No-load running torque on the output shaft side (Nm)}}{\text{Speed ratio}}$$

Technical data

Efficiency table

RA Series

Case temperature: 30°C
Lubricant: Grease (Molywhite RE00)

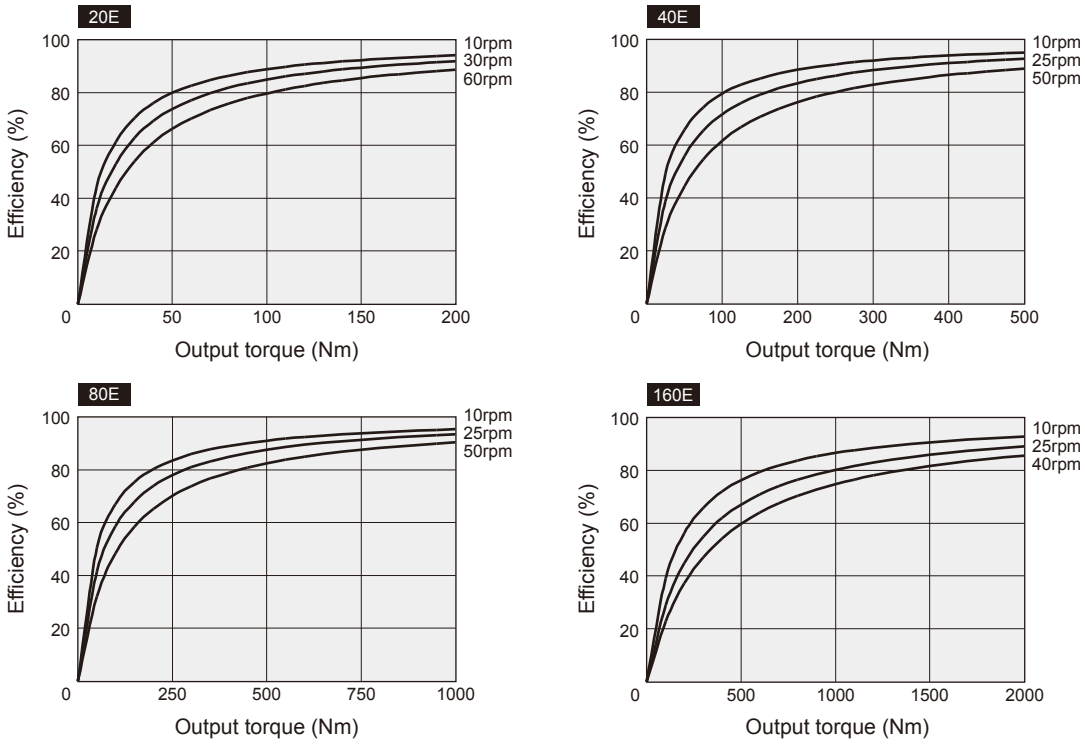

Technical data

Low-temperature characteristics

RA Series

Input speed: 2000 rpm
Lubricant: Grease (Molywhite RE00)

When the reduction gear is used at a low temperature, viscosity of lubricant increases and causes a larger no-load running torque.
The no-load running torque at low temperature is shown below.
Use the following formula to calculate the no-load running torque converted to the motor shaft.

$$\text{No-load running torque converted to the motor shaft (Nm)} = \frac{\text{Torque converted into the output shaft (Nm)}}{R} \text{ (R: speed ratio value)}$$

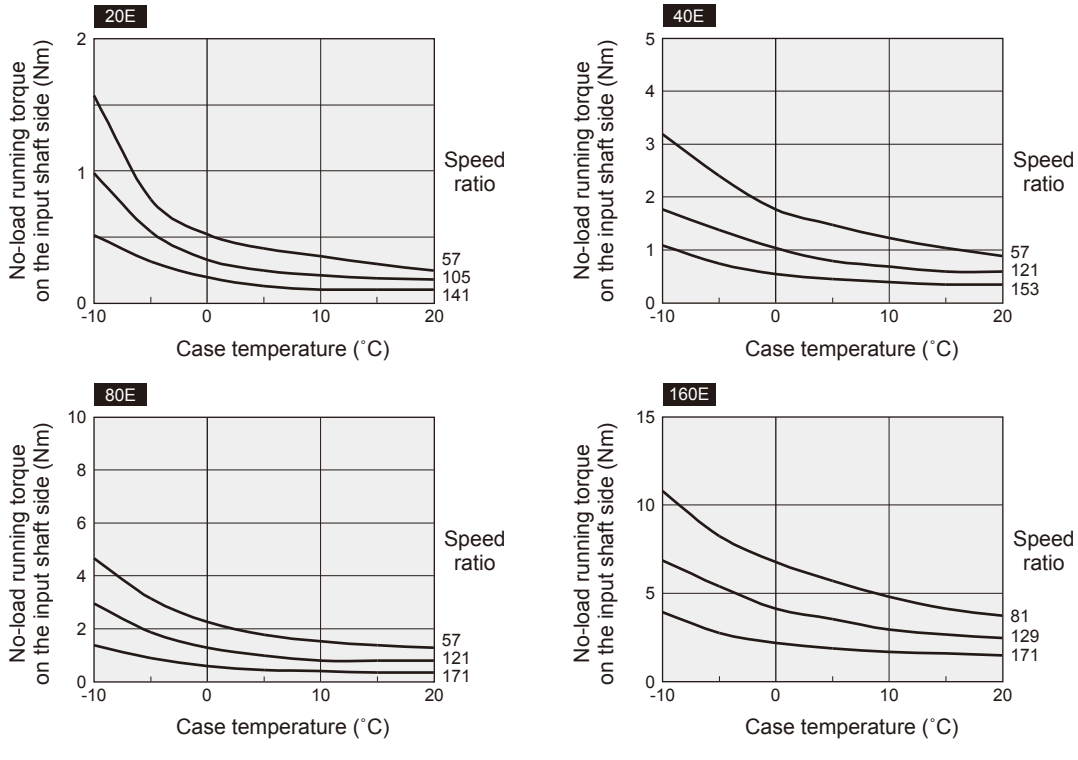

Calculation of tilt angle and torsion angle

Calculation of tilt angle

When a load moment occurs with an external load applied, the output shaft will tilt in proportion to the load moment (If ℓ_3 is larger than b)
The moment rigidity indicates the rigidity of the main bearing, and it is represented by the load moment value required for tilting the main bearing by 1 arc.min.

$$\theta = \frac{W_1\ell_1 + W_2\ell_2}{M_1 \times 10^3}$$

- θ : Tilt angle of the output shaft (arc.min.)
- M_1 : Moment rigidity (Nm/arc.min.)
- W_1, W_2 : Load (N)
- ℓ_1, ℓ_2 : Distance to the point of load application (mm)
- ℓ_1 : $\ell + \frac{b}{2} + a - b$
- ℓ : Distance from the output shaft installation surface to the point of load application (mm)

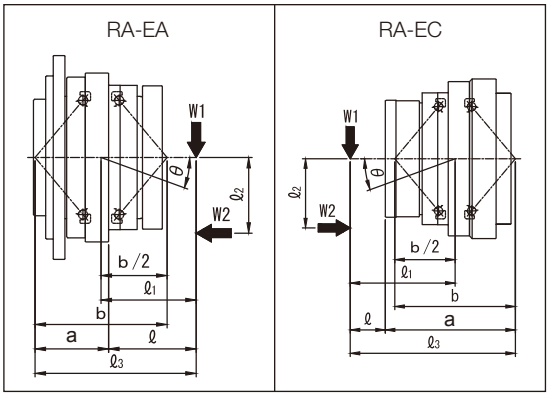

Model	Moment rigidity (central value) (Nm/arc.min.)	Dimensions (mm)	
		a	b
RA-20EA	372	63.1	113.3
RA-40EA	931	83.1	143.7
RA-80EA	1,176	81.5	166
RA-160EA	2,940	93.8	210.9

Model	Moment rigidity (central value) (Nm/arc.min.)	Dimensions (mm)	
		a	b
RA-20EC	372	122.2	113.3
RA-40EC	931	148.1	143.7
RA-80EC	1,176	158.4	166
RA-160EC	2,940	201.8	210.9

Calculation of torsion angle

Calculate the torsion angle when the torque is applied in a single direction, using an example of RA-160E.

1) When the load torque is 30 Nm.....Torsion angle (ST_1)
   When the load torque is within the lost motion range

$$ST_1 = \frac{30}{47} \times \frac{1\ (\text{arc.min.})}{2} = 0.32\text{arc.min. or less}$$

2) When the load torque is 1,300 Nm.....Torsion angle (ST_2)
   When the load torque is within the rated torque range

$$ST_2 = \frac{1}{2} + \frac{1300 - 47.0}{392} = 3.70\text{arc.min.}$$

Note: 1. The torsion angles that are calculated above are for a single reduction gear.
2. Contact us for the customized specifications for lost motion.

Model	Torsional rigidity (central value) (Nm/arc.min.)	Lost motion		Backlash (arc.min.)
		Lost motion (arc.min.)	Measured torque (Nm)	
RA-20E	49	1.0	± 5.0	1.0
RA-40E	108		± 12.3	
RA-80E	196		± 23.5	
RA-160E	392		± 47.0	

Reduction gear installation components

Installation of the reduction gear and mounting it to the output shaft

When installing the reduction gear and mounting it to the output shaft, use hexagon socket head cap screws and tighten them at the torque as specified below. This is to satisfy the momentary maximum allowable torque, which is noted in the rating table.
The use of the serrated lock washers are recommended to prevent the hexagon socket head cap screws from loosening and to protect the seat surface from flaws.

• Hexagon socket head cap screw

<Bolt tightening torque and tightening force>

Hexagon socket head cap screw nominal size x pitch (mm)	Tightening torque (Nm)	Tightening force F (N)	Bolt specification
M5 × 0.8	9.01 ± 0.49	9,310	Hexagon socket head cap screw JIS B 1176: 2006 Strength class JIS B 1051: 2000 12.9 Thread JIS B 0209: 2001 6g
M6 × 1.0	15.6 ± 0.78	13,180	
M8 × 1.25	37.2 ± 1.86	23,960	
M10 × 1.5	73.5 ± 3.43	38,080	
M12 × 1.75	129 ± 6.37	55,100	
M16 × 2.0	319 ± 15.9	103,410	

Note: 1. The tightening torque values listed are for steel or cast iron material.
2. If softer material, such as aluminum or stainless, is used, limit the tightening torque. Also take the transmission torque and load moment into due consideration.

<Calculation of allowable transmission torque of bolts>

$$T = F \times \mu \times \frac{D}{2 \times 1{,}000} \times n$$

T	Allowable transmission torque by tightening bolt (Nm)
F	Bolt tightening force (N)
D	Bolt mounting P.C.D. (mm)
μ	Friction factor μ=0.15: When lubricant remains on the mating face. μ=0.20: When lubricant is removed from the mating face.
n	Number of bolts (pcs.)

• Serrated lock washer for hexagon socket head cap screw

Name: Belleville spring washer (made by Heiwa Hatsujyo Industry Co., Ltd.)
Corporation symbol: CDW-H
CDW-L (Only for M5)
Material: S50C to S70C
Hardness: HRC40 to 48

(Unit: mm)

Nominal size	ID and OD of Belleville spring washer		t	H
	Ød	ØD		
5	5.25	8.5	0.6	0.85
6	6.4	10	1.0	1.25
8	8.4	13	1.2	1.55
10	10.6	16	1.5	1.9
12	12.6	18	1.8	2.2
16	16.9	24	2.3	2.8

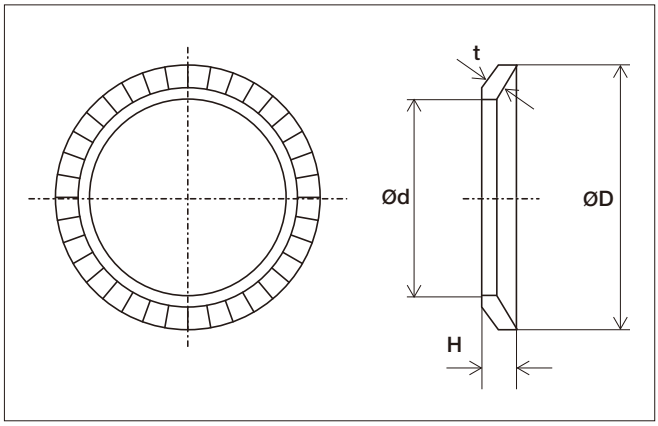

Note: When using any equivalent washer, select it with special care given to its outside diameter D.

Lubrication

- The standard lubrication method for the RA reduction gears is greasing.
  Before the reduction gear is shipped, it is filled with our recommended grease (Molywhite RE00).
  When operating a reduction gear filled with the appropriate amount of grease, the standard replacement time due to deterioration of the grease is 20,000 hours.
  When using the gear with deteriorated grease or under an inappropriate ambient temperature condition (40ºC or more), check the deterioration condition of the grease and determine the appropriate replacement cycle.
- Specified grease name

Grease name	Molywhite RE00
Manufacturer	Nabtesco Corporation
Ambient temperature	-10 to 40ºC

- It is recommended that the running-in operation is performed.
  Abnormal noise or torque variation may occur during operation due to the characteristics of the lubricant. There is no problem with the quality when the symptom disappears after the running-in operation is performed.

Requirements for equipment design

If the lubricant leaks from the reduction gear or if the motor fails, the reduction gear must be removed. Design the equipment while taking this into consideration.

Inertia moment calculation formula

Shape	I(kgm²)
1. Cylinder solid 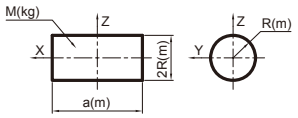	$I_x = \frac{1}{2} M R^2$ $I_y = \frac{1}{4} M \left(R^2 + \frac{a^2}{3} \right)$ $I_z = I_y$
2. Cylinder hollow 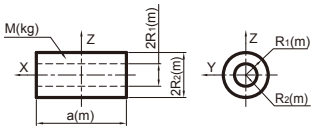	$I_x = \frac{1}{2} M \left(R_1^2 + R_2^2 \right)$ $I_y = \frac{1}{4} M \left\{ \left(R_1^2 + R_2^2 \right) + \frac{a^2}{3} \right\}$ $I_z = I_y$
3. Oval cross section 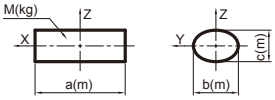	$I_x = \frac{1}{16} M \left(b^2 + c^2 \right)$ $I_y = \frac{1}{4} M \left(\frac{c^2}{4} + \frac{a^2}{3} \right)$ $I_z = \frac{1}{4} M \left(\frac{b^2}{4} + \frac{a^2}{3} \right)$
4. Rectangle 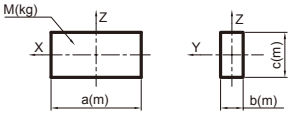	$I_x = \frac{1}{12} M \left(b^2 + c^2 \right)$ $I_y = \frac{1}{12} M \left(a^2 + c^2 \right)$ $I_z = \frac{1}{12} M \left(a^2 + b^2 \right)$
5. General application 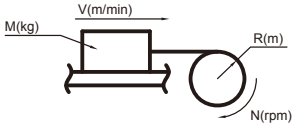	$I = \frac{M}{4} \left(\frac{V}{\pi \times N} \right)^2 = MR^2$

Shape	I(kgm²)
6. Horizontal movement by conveyor 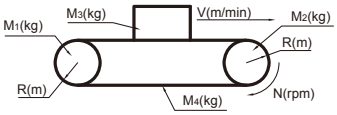	$I = \left(\frac{M_1 + M_2}{2} + M_3 + M_4 \right) \times R^2$
7. Horizontal movement by lead screw 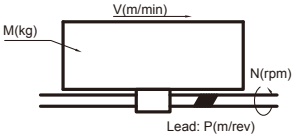	$I = \frac{M}{4} \left(\frac{V}{\pi \times N} \right)^2 = \frac{M}{4} \left(\frac{P}{\pi} \right)^2$
8. Up/down movement by hoist 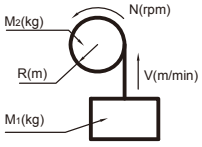	$I = M_1 R^2 + \frac{1}{2} M_2 R^2$
9. Parallel axis theorem 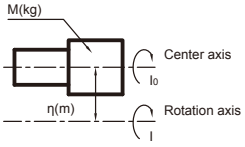	$I = I_0 + M\eta^2$ I_0 : Moment of inertia of any object about an axis through its center of mass I : Moment of inertia about any axis parallel to the axis through its center of mass η : Perpendicular distance between the above two axes

Troubleshooting checksheet

Check the following items in the case of trouble like abnormal noise, vibration, or malfunctions.
When it is not possible to resolve an abnormality even after verifying the corresponding checkpoint, obtain a “Reduction Gear Investigation Request Sheet” from the download page in our Website, fill in the necessary information, and contact our Customer Support Center at Tsu Plant.

[URL]: **http://precision.nabtesco.com/**

The trouble started immediately after installation of the reduction gear

Checked	Checkpoint
	Make sure the equipment’s drive section (the motor side or the reduction gear output surface side) is not interfering with another component.
	Make sure the equipment is not under a greater than expected load (torque, moment load, thrust load).
	Make sure the required number of bolts are tightened uniformly with the specified tightening torque.
	Make sure the reduction gear, motor, or your company’s components are not installed at a slant.
	Make sure the specified amount of Nabtesco-specified lubricant has been added.
	Make sure there are no problems with the motor’s parameter settings.
	Make sure there are no components resonating in unity.
	Make sure the input gear is appropriately installed on the motor.
	Make sure there is no damage to the surface of the input gear teeth.
	Make sure the input gear specifications (precision, number of teeth, module, shift coefficient, dimensions of each part) are correct.
	Make sure the flange and other components are designed and manufactured with the correct tolerances.

The trouble started during operation

Checked	Checkpoint
	Make sure the equipment has not been in operation longer than the calculated service life.
	Make sure the surface temperature of the reduction gear is not higher than normal during operation.
	Make sure the operation conditions have not been changed.
	Make sure there are no loose or missing bolts.
	Make sure the equipment is not under a greater than expected load (torque, moment load, thrust load).
	Make sure the equipment’s drive section is not interfering with another component.
	Make sure an oil leak is not causing a drop in the amount of lubricant.
	Make sure there are no external contaminants in the gear, such as moisture or metal powder.
	Make sure no lubricant other than that specified is being used.

▶ Area In North and South America / In Europe and Africa / In Asia and others
▶ FAX USA: / Germany: / Osaka Sales Office:
1-248-553-3070 / 49-211-364677 / 81-6-6341-7182

Order Information Sheet

(Please complete the form below and send it with your order.) Date.

Company Name: Dept. Name:

Name: E-mail:

TEL. - - FAX. - -

◆ System configuration and selected motor

We would appreciate if you could provide your system configuration drawing that helps us to understand the speed, constant torque, and load inertia moment of the output shaft for the reduction gear.

System configuration

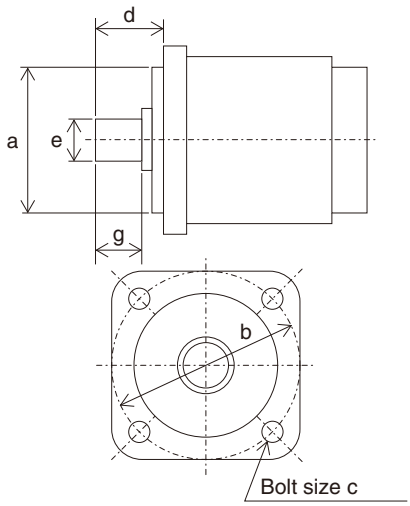

Motor model		
P	Motor rated output (KW)	
T_{M0}	Motor rated torque (Nm)	
T_{M1}	Motor momentary maximum torque (Nm)	
N_{M0}	Motor rated speed (rpm)	

a	Motor mounting pilot diameter (mm)	
b	Motor mounting bolt P.C.D (mm)	
c	Motor mounting bolt size (mm)	
d	Motor shaft length (mm)	
e	Motor shaft diameter (mm)	
g	Motor shaft effective length (mm)	

Please inform us of whether a key is attached or not, and when it is attached, also inform us of its dimensions.

◆ Operation pattern (output shaft for the reduction gear)

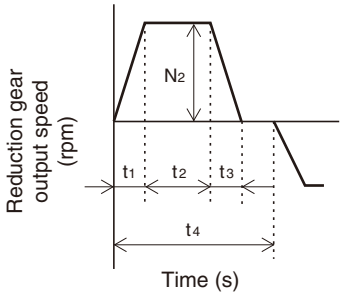

t_1	Acceleration time (s)	
t_2	Constant speed operation time (s)	
t_3	Deceleration time (s)	
t_4	One operation cycle time (s)	
Q_{1CY}	Number of operation cycles per day (times)	
Q_2	Number of operating days per year (days)	
N_2	Constant speed (rpm)	
T_1	Max. torque for startup (Nm)	
T_2	Constant torque (Nm)	
T_3	Max. torque for stop (Nm)	

◆ External load (output shaft for the reduction gear)

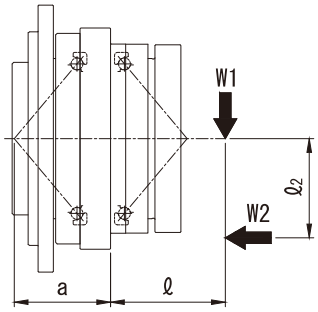

W_1	Radial load (N)	
ℓ	Distance to the point of radial load application (mm)	
W_2	Axial load (N)	
ℓ_2	Distance to the point of axial load application (mm)	

MEMO

MEMO

Warranty

1. In the case where Nabtesco confirms that a defect of the Product was caused due to Nabtesco's design or manufacture within the Warranty Period of the Product, Nabtesco shall repair or replace such defective Product at its cost. The Warranty Period shall be from the delivery of the Product by Nabtesco or its distributor to you (“Customer”) until the end of one (1) year thereafter, or the end of two thousand (2,000) hours from the initial operation of Customer's equipment incorporating the Product at end user's production line, whichever comes earlier.
2. Unless otherwise expressly agreed between the parties in writing, the warranty obligations for the Product shall be limited to the repair or replacement set forth herein. OTHER THAN AS PROVIDED HEREIN, THERE ARE NO WARRATIES ON THE PRODUCT, EXPRESS OR IMPLIED, INCLUDING WITHOUT LIMITATION ANY IMPLIED WARRANTY OF MERCHANTABILITY OR FITNESS FOR A PARTICULAR PURPOSE.
3. The warranty obligation under the Section 1 above shall not apply if:
   a) the defect was caused due to the use of the Product deviated from the Specifications or the working conditions provided by Nabtesco;
   b) the defect was caused due to exposure to foreign substances or contamination (dirt, sand etc.)
   c) lubricant or spare part other than the ones recommended by Nabtesco was used in the Product;
   d) the Product was used in an unusual environment (such as high temperature, high humidity, a lot of dust, corrosive/volatile/inflammable gas, pressurized/depressurized air, under water/liquid or others except for those expressly stated in the Specifications);
   e) the Product was disassembled, re-assembled, repaired or modified by anyone other than Nabtesco;
   f) the defect was caused due to the equipment into which the Product was installed;
   g) the defect was caused due to an accident such as fire, earthquake, lightning, flood or others; or
   h) the defect was due to any cause other than the design or manufacturing of the Product.
4. The warranty period for the repaired/replaced Product/part under the Section 1 above shall be the rest of the initial Warranty Period of the defective Product subjected to such repair/replace.

Rev. 004.2E

Nabtesco

Nabtesco Corporation

Europe and Africa

Nabtesco Precision Europe GmbH
Tiefenbroicher Weg 15, 40472 Düsseldorf, Germany
TEL: +49-211-173790 FAX: +49-211-364677
E-MAIL: info@nabtesco.de www.nabtesco.de

North and South America

Nabtesco Motion Control Inc.
23976 Freeway Park Drive, Farmington Hills, MI 48335, USA
TEL: +1-248-553-3020 FAX: +1-248-553-3070
E-MAIL: engineer@nabtescomotioncontrol.com www.nabtescomotioncontrol.com

China

Shanghai Nabtesco Motion-equipment Co., Ltd.
Room 1706, No. 388 Fu Shan Road, Pudong New Area, Shanghai 200122, China
TEL: +86-21-3363-2200 FAX: +86-21-3363-2655
E-MAIL: info@nabtesco-motion.cn www.nabtesco-motion.cn

India

Nabtesco India Private Limited
No. 506, Prestige Meridian - II No.30/8, M.G. Road, Bangalore-560 001 India
TEL: +91-80-4123-4901 FAX: +91-80-4123-4903

Asia and others

Nabtesco Corporation
Osaka Sales Office
21st Fl, Dojima Avanza, 1-6-20 Dojima, Kita-ku, Osaka 530-0003, Japan
TEL: +81-6-6341-7180 FAX: +81-6-6341-7182

Tsu Plant
594 Icchoda, Katada-cho, Tsu, Mie 514-8533, Japan
TEL: +81-59-237-4600 FAX: +81-59-237-4610

E-MAIL: P_Information@nabtesco.com http://precision.nabtesco.com/

- Nabtesco, RV are registered trademarks or trademarks of Nabtesco Corporation.
- Specifications are subject to change without notice.
- The PDF data of this catalog can be downloaded from the following website.
  http://precision.nabtesco.com/
  If any addition or modification is made to the published information, the PDF data may be updated before the printed catalog.
  Due to this, please note that some contents of the PDF data may be changed or revised from those in this catalog.
- Unauthorized reprinting, reproduction, copying, or translation of this catalog in whole or in part is strictly prohibited.

CAT.180410 (Issued on April 10, 2018)